SERVICE MANUAL

ON/OFF

Wall mounted Type V-Series

HSU-09H03/VA(ZXF)
HSU-12H03/VA(ZXF)

Haier
Inspired living

splitoff.ru

Большая библиотека технической документации
https://splitsystema48.ru/instrukcii-po-ekspluatacii-kondicionerov.html
каталоги, инструкции, сервисные мануалы, схемы.

Table of Contents

1. Introduction…… 1
2. List of Functions …… 6
3. Specifications …… 7
4. Printed Circuit Board Connector Wiring Diagram …… 9
5. Functions and Control…… 11
5.1 main functions and control specifications……11
5.2 Function of Main Thermistor……16
5.3 Value of Thermistor.. ……17
6. System Configuration ……25
6.1 System Configuration……25
6.2 Instruction……24
7. Error Codes and Description……50
7.1 Problem Symptoms and Measures ……50
7.2 TroubleShooting……50
8. Installations……54
9. Removal Procedure……64
9.1 Removal of Air Filter……64
9.2 Removal of Front Grille……65
9.3 Removal of Vertical Blades and Swing Motor ……67

Все каталоги и инструкции здесь: https://splitsystema48.ru/instrukcii-po-ekspluatacii-kondicionerov.html

9.4 Removal of Electrical Box……..……..……..….....68

9.5 Removal of Heat Exchanger…….... 70

9.6 Removal of Fan Rotor and Fan Motor……..……71

9.7 Removal of Outdoor panel.....……..……72

9.8 Removal of Electrical Box……..……..……..….....76

9.9 Removal of Fan and Fan Motor.....……..……77

9.10 Removal of fan motor bractek and parttion ….…..……..……..….....78

9.11 Removal of compressor and heat exchanger……..…80

10. Appendix……..82

10.1 Piping Diagrams…….82

10.2 Wiring Diagrams…….83

10.3 Circuit Diagrams…….84

Все каталоги и инструкции здесь: https://splitsystema48.ru/instrukcii-po-ekspluatacii-kondicionerov.html

1. Introduction

1.1 Safety Cautions

Be sure to read the following safety cautions before conducting repair work.

The caution items are classified into “Warning” and “Caution”. The “Warning” items are especially important since they can lead to death or serious injury if they are not followed closely. The “Caution” items can also lead to serious accidents under some conditions if they are not followed. Therefore, be sure to observe all the safety caution items described below.

About the pictograms

△ This symbol indicates an item for which caution must be exercised.
The pictogram shows the item to which attention must be paid.

○ This symbol indicates a prohibited action.
The prohibited item or action is shown inside or near the symbol.

● This symbol indicates an action that must be taken, or an instruction.
The instruction is shown inside or near the symbol.

After the repair work is complete, be sure to conduct a test operation to ensure that the equipment operates normally, and explain the cautions for operating the product to the customer.

1.1.1 Caution in Repair

Warning	
Be sure to disconnect the power cable plug from the plug socket before disassembling the equipment for a repair. Working on the equipment that is connected to a power supply can cause an electrical shook. If it is necessary to supply power to the equipment to conduct the repair or inspecting the circuits, do not touch any electrically charged sections of the equipment.	
If the refrigerant gas discharges during the repair work, do not touch the discharging refrigerant gas.The refrigerant gas can cause frostbite.	
When disconnecting the suction or discharge pipe of the compressor at the welded section, release the refrigerant gas completely at a well-ventilated place first. If there is a gas remaining inside the compressor, the refrigerant gas or refrigerating machine oil discharges when the pipe is disconnected, and it can cause injury.	
If the refrigerant gas leaks during the repair work, ventilate the area. The refrigerant gas can generate toxic gases when it contacts flames.	
The step-up capacitor supplies high-voltage electricity to the electrical components of the outdoor unit. Be sure to discharge the capacitor completely before conducting repair work.A charged capacitor can cause an electrical shock.	
Do not start or stop the air conditioner operation by plugging or unplugging the power cable plug. Plugging or unplugging the power cable plug to operate the equipment can cause an electrical shock or fire.	

Все каталоги и инструкции здесь: https://splitsystema48.ru/instrukcii-po-ekspluatacii-kondicionerov.html

Warning	
Do not repair the electrical components with wet hands. Working on the equipment with wet hands can cause an electrical shock.	
Do not clean the air conditioner by splashing water. Washing the unit with water can cause an electrical shock.	
Be sure to provide the grounding when repairing the equipment in a humid or wet place, to avoid electrical shocks.	
Be sure to turn off the power switch and unplug the power cable when cleaning the equipment. The internal fan rotates at a high speed, and cause injury.	
Do not tilt the unit when removing it. The water inside the unit can spill and wet the furniture and floor.	
Be sure to check that the refrigerating cycle section has cooled down sufficiently before conducting repair work. Working on the unit when the refrigerating cycle section is hot can cause burns.	
Use the welder in a well-ventilated place. Using the welder in an enclosed room can cause oxygen deficiency.	

1.1.2 Cautions Regarding Products after Repair

Warning	
Be sure to use parts listed in the service parts list of the applicable model and appropriate tools to conduct repair work. Never attempt to modify the equipment. The use of inappropriate parts or tools can cause an electrical shock, excessive heat generation or fire.	
When relocating the equipment, make sure that the new installation site has sufficient strength to withstand the weight of the equipment. If the installation site does not have sufficient strength and if the installation work is not conducted securely, the equipment can fall and cause injury.	
Be sure to install the product correctly by using the provided standard installation frame. Incorrect use of the installation frame and improper installation can cause the equipment to fall, resulting in injury.	For integral units only
Be sure to install the product securely in the installation frame mounted on a window frame. If the unit is not securely mounted, it can fall and cause injury.	For integral units only

Все каталоги и инструкции здесь: https://splitsystema48.ru/instrukcii-po-ekspluatacii-kondicionerov.html

Warning	
Be sure to use an exclusive power circuit for the equipment, and follow the technical standards related to the electrical equipment, the internal wiring regulations and the instruction manual for installation when conducting electrical work. Insufficient power circuit capacity and improper electrical work can cause an electrical shock or fire.	
Be sure to use the specified cable to connect between the indoor and outdoor units. Make the connections securely and route the cable properly so that there is no force pulling the cable at the connection terminals. Improper connections can cause excessive heat generation or fire.	
When connecting the cable between the indoor and outdoor units, make sure that the terminal cover does not lift off or dismount because of the cable. If the cover is not mounted properly, the terminal connection section can cause an electrical shock, excessive heat generation or fire.	
Do not damage or modify the power cable. Damaged or modified power cable can cause an electrical shock or fire. Placing heavy items on the power cable, and heating or pulling the power cable can damage the cable.	
Do not mix air or gas other than the specified refrigerant (R-410A / R22) in the refrigerant system. If air enters the refrigerating system, an excessively high pressure results, causing equipment damage and injury.	
If the refrigerant gas leaks, be sure to locate the leak and repair it before charging the refrigerant. After charging refrigerant, make sure that there is no refrigerant leak. If the leak cannot be located and the repair work must be stopped, be sure to perform pump-down and close the service valve, to prevent the refrigerant gas from leaking into the room. The refrigerant gas itself is harmless, but it can generate toxic gases when it contacts flames, such as fan and other heaters, stoves and ranges.	
When replacing the coin battery in the remote controller, be sure to disposed of the old battery to prevent children from swallowing it. If a child swallows the coin battery, see a doctor immediately.	

Caution	
Installation of a leakage breaker is necessary in some cases depending on the conditions of the installation site, to prevent electrical shocks.	
Do not install the equipment in a place where there is a possibility of combustible gas leaks. If a combustible gas leaks and remains around the unit, it can cause a fire.	
Be sure to install the packing and seal on the installation frame properly. If the packing and seal are not installed properly, water can enter the room and wet the furniture and floor.	For integral units only

Все каталоги и инструкции здесь: https://splitsystema48.ru/instrukcii-po-ekspluatacii-kondicionerov.html

1.1.3 Inspection after Repair

Warning	
Check to make sure that the power cable plug is not dirty or loose, then insert the plug into a power outlet all the way. If the plug has dust or loose connection, it can cause an electrical shock or fire.	
If the power cable and lead wires have scratches or deteriorated, be sure to replace them. Damaged cable and wires can cause an electrical shock, excessive heat generation or fire.	

Warning	
Do not use a joined power cable or extension cable, or share the same power outlet with other electrical appliances, since it can cause an electrical shock, excessive heat generation or fire.	

Caution	
Check to see if the parts and wires are mounted and connected properly, and if the connections at the soldered or crimped terminals are secure. Improper installation and connections can cause excessive heat generation, fire or an electrical shock.	
If the installation platform or frame has corroded, replace it. Corroded installation platform or frame can cause the unit to fall, resulting in injury.	
Check the grounding, and repair it if the equipment is not properly grounded. Improper grounding can cause an electrical shock.	
Be sure to measure the insulation resistance after the repair, and make sure that the resistance is 1 M ohm or higher. Faulty insulation can cause an electrical shock.	
Be sure to check the drainage of the indoor unit after the repair. Faulty drainage can cause the water to enter the room and wet the furniture and floor.	

Все каталоги и инструкции здесь: https://splitsystema48.ru/instrukcii-po-ekspluatacii-kondicionerov.html

1.1.4 Using Icons

Icons are used to attract the attention of the reader to specific information. The meaning of each icon is described in the table below:

1.1.5 Using Icons List

Icon	Type of Information	Description
Note:	Note	A “note” provides information that is not indispensable, but may nevertheless be valuable to the reader, such as tips and tricks.
Caution	Caution	A “caution” is used when there is danger that the reader, through incorrect manipulation, may damage equipment, loose data, get an unexpected result or has to restart (part of) a procedure.
Warning	Warning	A “warning” is used when there is danger of personal injury.
	Reference	A “reference” guides the reader to other places in this binder or in this manual, where he/she will find additional information on a specific topic.

Все каталоги и инструкции здесь: https://splitsystema48.ru/instrukcii-po-ekspluatacii-kondicionerov.html

2. List of Functions

Category	Functions	HSU-09C03/VA(ZXF)	HSU-12C03/VA(ZXF)
Healthy negative ion	make your room full of an abundance natural negative ions.	N	N
Left&right flow	With specialized motor and flaps, the airflow can be adjusted .	Y	Y
DRY function	Make dehumidifying in the room when the unit is working in the "DRY" mode	Y	Y
Child lock	Avoid the child's wrong operation on the remote controller	Y	Y
3D air flow	The 3D airflow is able to deliver the airflow horizontally and vertically.	Y	Y
24Hour timer	Use the timer function to set on,or off,or from on to off,or from off to on	Y	Y
Auto restart	automatic return to previous operation conditions after asundden power blackout	N	N
Easy clean design	The panel is easy to wash and the airflow vents can be detached easily	Y	Y
Intelligent air	With twin-blade technology ,the airflow can be adjusted not to blow directly	Y	Y
Anti-mold filter	Catches most small particles and remove unpleasant odors effectively.	N	N
Sleep mode	The setting temprature and the indoor noise can be adjusted to a more comfortable level when you set the "sleep mode"during night sleep	Y	Y
O2 refresh	bring fresh air in and take unpleasant air out without tempreture and humidity loss	N	N
4 Fan setting	Slect the fan speed LO,MED,HI,AUTO	Y	Y
Entire auto mode	You can set a tempreture value,with which the unit can be adjusted the operation mode automatically	Y	Y
O2 fresh	It can bring the fresh air in when the machine is running in O2 fresh mode.	Y	Y
Healthy UV ray	UV ray generator can eliminate and prevent bacteria in air effectively	Y	Y
Bacteria-killing medium	3-in-1 effect:Anti-Allergen , Anti-Bactetia	Y	Y
AIP	Purify the room by producing high voltage electric filed to absorb dusts	N	N
VC layer	Release Vitamin C to keep health to the skin expecially.	N	N
Auto mode	adjust the last fixed operation mode automatically.	N	N
ESF filter	Trap harmful dust and remove unpleasant odors effectively	N	N
Power mode	Quick cooling or heating	N	N
Soft mode	lower noise operation condition	N	N
Negative ion filter	Generate negative ions by the filter.	N	N
Constant temperature dehumidification	Make dehumidifying in the room while keeping the constant temperature inside	N	N
Photocatalyst filter	Eminiates the air of a wide variety of odor-causing substances from cigarette smoke particles to chemical vapors	Y	Y

Note: Y: Holding Functions

N: No Functions

Haier Все каталоги и инструкции здесь: https://splitsystema48.ru/instrukcii-po-ekspluatacii-kondicionerov.html estic Air Conditioner

3. Specifications

Model			HSU-09H03/VA(ZXF)		HSU-12H03/VA(ZXF)	
			Cooling	Heating	Cooling	Heating
Capacity Rated (Min.~Max.)		kW	2.5	2.9	3.5	3.9
		Btu/h	8535	9900	11949	13315
		kcal/h	2150	2494	3010	3354
Moisture Removal		L/h	1.2	—	1.5	—
Running Current (Rated)		A	4.1	4.3	5.8	6.3
Power Consumption Rated (Min.~Max.)		W	910	880	1250	1350
Power Factor		%	98	98	98	98
COP Rated (Min.~Max.)		W/W	2.75	3.30	2.80	2.89
Piping Connections	Liquid	mm	φ 6.35		φ 6.35	
	Gas	mm	φ 9.52		φ 12.7	
	Drain	mm	φ16.0		φ16.0	
Heat Insulation			Both Liquid and Gas Pipes		Both Liquid and Gas Pipes	
Max. Interunit Piping Length		m	7		7	
Max. Interunit Height Difference		m	5		5	
Chargeless		m	5		5	
Amount of Additional Charge of Refrigerant		g/m	16		16	
Indoor Unit						
Front Panel Color			Mat Crystal White		Mat Crystal Silver	
Air Flow Rate	m³/min(cfm)	H	7.5	9.0	9.5	10.5
		M	7.0	8.0	9.0	9.8
		L	6.5	7.0	8.5	9.0
		SL	6.1	6.2	7.9	8.2
Fan	Type		Cross Flow Fan		Cross Flow Fan	
	Motor Output	W	16		16	
	Speed	Steps	5 Steps, Silent, Auto		5 Steps, Silent, Auto	
Air Direction Control			Right, Left, Horizontal, Downward		Right, Left, Horizontal, Downward	
Air Filter			Removable / Washable / Mildew Proof		Removable / Washable / Mildew Proof	
Running Current (Rated)		A	0.15	0.15	0.15	0.15
Power Consumption (Rated)		W	33	33	33	33
Power Factor		%	96	96	96	96
Temperature Control			Microcomputer Control		Microcomputer Control	
Dimensions (H×W×D)		mm	265x795x182		265x795x182	
Packaged Dimensions (H×W×D)		mm	312x857x292		312x857x292	
Weight		kg	9		9	
Gross Weight		kg	13		13	
OperationSound	H/M/L	dBA	38/34/30	38/34/30	39/35/30	39/35/30
Sound Power	H	dBA	38	38	39	39

Все каталоги и инструкции здесь: https://splitsystema48.ru/instrukcii-po-ekspluatacii-kondicionerov.html

Outdoor Unit						
Casing Color			Ivory White		Ivory White	
Compressor	Type		rotary Compressor		rotary Compressor	
	Model		2P18S225ANC		PH240	
	Motor Output	W	790		970	
RefrigerantOil	Model		SUNISO 4GSI		SUNISO 4GSI	
	Charge	L	0.27		0.52	
Refrigerant	Model		R22		R22	
	Charge	kg	0.74		0.95	
Air Flow Rate (H/L)	m³/min		21	21	23	23
	cfm		741	741	812	812
Fan	Type		Propeller		Propeller	
	Motor Output	W	80		80	
Running Current (Rated)		A	3.97	3.97	5.54	6.00
Power Consumption (Rated)		W	860	860	1195	1290
Power Factor		%	98	98	98	98
Starting Current		A	32		45	
Dimensions (H×W×D)		mm	430x700x250		430x700x250	
Packaged Dimensions (H×W×D)		mm	505x848x363		505x848x363	
Weight		kg	28		33	
Gross Weight		kg	33		39	
OperationSound	H/L	dBA	48		50	
Sound Power	H	dBA				

Note: The data are based on the conditions shown in the table below.

Cooling	Heating	Piping Length
Indoor ; 27°CDB/19°CWB Outdoor ; 35°CDB/24°CWB	Indoor ; 20°CDB Outdoor ; 7°CDB/6°CWB	5m

Conversion Formulae
kcal/h=kW×860
Btu/h=kW×3414
cfm=m³/min×35.3

Haier Все каталоги и инструкции здесь: https://splitsystema48.ru/instrukcii-po-ekspluatacii-kondicionerov.html estic Air Conditioner

4. Printed Circuit Board Connector Wiring Diagram

Indoor Unit

Connectors

PCB(1) (Control PCB)

1) CON12 Connector for fan motor
2) CN2 Connector for up and down STEP motor
3)CN3 Connector for right STEP motor
4) CN4 Connector for left STEP moto
5) CN8 Connector for heat exchanger thermistor and Room temperature thermistor
6) CON21Connector for power L wire
7) CON13-N Connector for power N wire
   CON13-ST Connector for control 4-way valve
   CON13-WF Connector for control the fan of outdoor

8) CN5-1 Connector for display board
9)CON14,CON15 Connector for ions generator
10) CN7 Connector for the fan feedback
11) CN12 Connector for ultraviolet radiation sterilize

Note: Other designations

PCB(1) (INdoor Control PCB)

1) SW1 Forced operation ON / OFF switch
2) SW2 Select 09 model or 12 model
3)ZE1 Varistor
4) Fuse1 (3.15A/250VAC)
5) IC2 EEPROM

Все каталоги и инструкции здесь: https://splitsystema48.ru/instrukcii-po-ekspluatacii-kondicionerov.html

PCB Detail PCB(1): Control PCB (indoor unit)

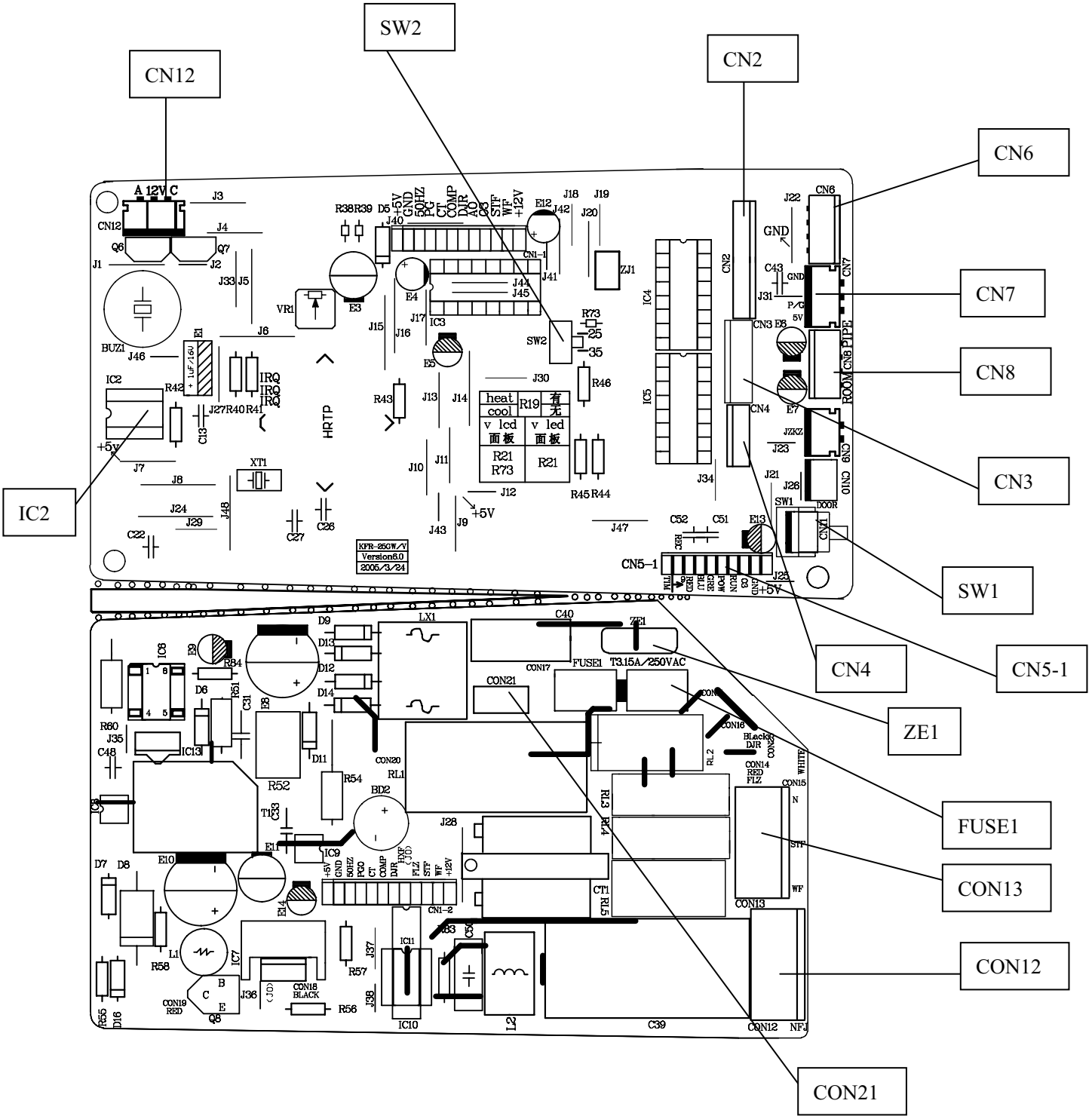

PCB(2): display board PCB

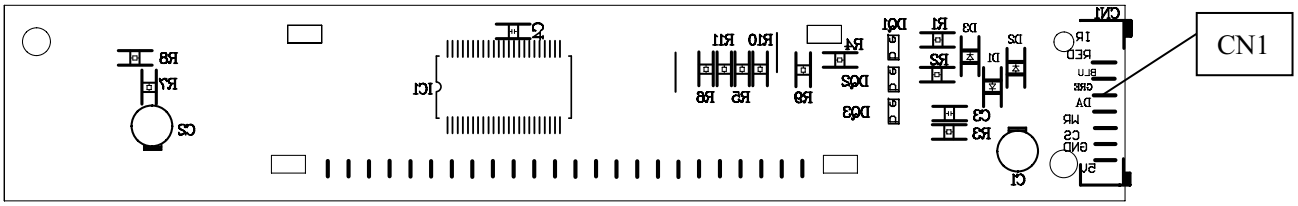

Все каталоги и инструкции здесь: https://splitsystema48.ru/instrukcii-po-ekspluatacii-kondicionerov.html

5. Funcitions and Control

5-1 main functions and control specifications

Run mode:(Tr: inlet air temperature,Ts：the set temperature)

5-1-1 automatic run mode

When the system runs under "automatic" mode for the first time, it will determine the operating mode according to the follows,

Tr≥Ts-3℃ Choose Cooling Mode

Tr＜Ts-3℃ Choose Heating Mode

The system will shift its operating mode between the above mentioned two to changes of the indoor temperature. If the system is currently under cooling mode, the compressor will stop functioning if the temperature lowers to such a degree that requires so; then it will recheck the temperature 15 minutes later: it will switch to the heating mode if the temperature is Tr＜Ts-3℃,or it will still stay in cooling mode(including blowing mode). if the system is currently under heating mode, the compressor will stop running if the temperature lowers to such a degree that requires so, then it will recheck the temperature 15 minutes later: it will switch to the cooling mode if the temperature is Tr＞Ts+3℃.

5-1-2 Indoor temperature control

Temperature control range : 16℃—30℃

Temperature control precision: ±1℃

Compressor can't be controlled by temperature sensor within 2 minutes after it starts

① Cooling mode:

When Tr> Ts, outdoor fan motor and compressor on, and indoor fan motor run at fixed wind speed. When Tr < Ts, outdoor fan motor and compressor off, and when Tr > Ts, outdoor fan motor and compressor are working again .If Tr=Ts, the indoor fan motor , outdoor fan motor and the compressor's state will not change.

② Heating mode:

When Tr ≤ Ts, compressor, four-ways valve and outdoor fan motor is on, indoor fan motor runs as in cold blast avoidance mode, and 4℃of compensation is added after compressor is started.

When Tr>Ts+5℃, compressor is off, and the indoor fan motor runs as in cold blast avoidance mode.

When Tr<Ts+5℃, compressor, four-ways valve and outdoor fan motor is on, and the indoor fan motor runs as in the mode of avoiding cold blast.

5-1-3 Dehumidification running

The compressor, outdoor fan and indoor fan will run as per the following

working pattern so as to realize the refrigerating running of dehumidification:

① Tr> Ts+2℃, compressor, outdoor fan run continuously, indoor fan runs as per setting wind speed (State 1);

② Ts+2℃≥Tr≥Ts, compressor, outdoor fan run intermittently with 10minutes ON, 6 minutes OFF. (Compressor and outdoor fan are synchronous)

Все каталоги и инструкции здесь: https://splitsystema48.ru/instrukcii-po-ekspluatacii-kondicionerov.html

indoor fan runs in fixed lower wind speed, and will cease at the stand-by time of 3 minutes (State 2)

③ Tr <Ts, compressor, outdoor fan ceases, indoor fan runs in lower windspeed. (State 3)

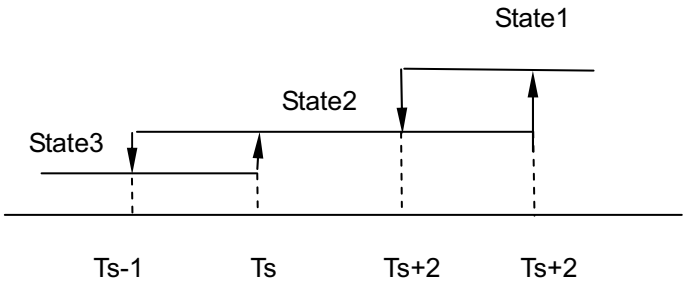

5-1-4 Warm start

When heating running begins, indoor fan will conduct the following fan control:

① If the temperature of indoor coil pipe is ≥ 23℃, start lower wind speed;

② If the temperature of indoor coil pipe is ≥ 38℃ or the running time of compressor≥ 4 minutes, turn to setting wind speed.

5-1-5 Control of indoor fan under heating OFF state

Under heating state, the compressor will cease; if the indoor coil pipe's temperature Tp≥23℃, indoor fan will run in lower wind speed ; if the coil pipe's temperature Tp<21℃,indoor fan will cease

5-1-6 Defrosting control

① Defrosting beginning condition:

a. After the state of Tp-Tr<18℃ is continued for 5 minutes, the accumulated running time of the compressor exceeds 45 minutes, the continuous running time of the compressor exceeds 20 minutes;

b. The accumulated running time of the compressor exceeds 3 hours, the continuous running time of the compressor exceeds 20 minutes, indoor unit's Tp <42℃;

c. The continuous running time of the compressor exceeds 20 minutes, the temperature of indoor coil pipe decreases 1℃ every 6 minutes, which lasts for more than 3 times, indoor unit's Tp <42℃;

d. When the indoor unit is in the state of overload protection and the outdoor unit ceases, when the rerunning time of outdoor unit exceeds10 minutes, the accumulated running time of the compressor exceeds 45 minutes, the continuous running time of the compressor is over 20 minutes, and Tp <42℃.

Defrosting will begin if one of the above conditions is met.

② Defrosting finishing condition:

If the defrosting time exceeds 9 (for 12 models)minutes ,the original heating state will be resumed;

Haier Все каталоги и инструкции здесь: https://splitsystema48.ru/instrukcii-po-ekspluatacii-kondicionerov.html estic Air Conditioner

Note: Sequence of defrosting actions:

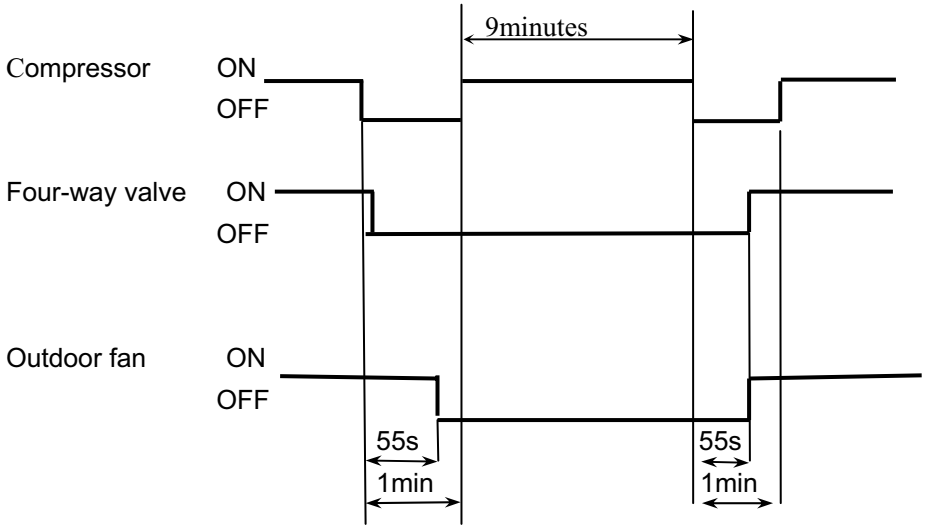

5-1-7 Freezing prevention function

Under refrigerating and dehumidifying state, the air conditioner will control the outdoor fan as per the temperature Tp of the indoor coil pipe according to the following conditions:

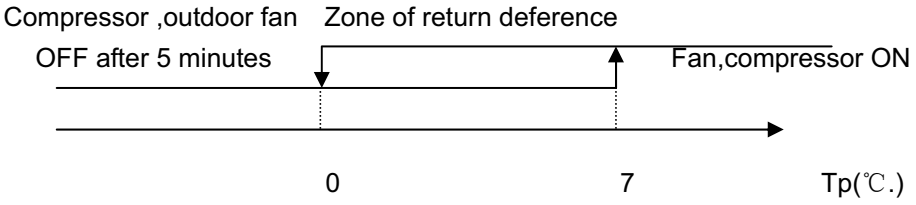

5-1-8 3minutes stand-by time

When the compressor ceases due to the sensor OFF, unit On or OFF or fault, it will maintain pause for 3 minutes.

5-1-9 Overload protection during heating running

Temperature protection of indoor coil pipe: Under heating state, the air conditioner will control the running of the fan as per the temperature Tp of the indoor coil pipe and according to the following conditions:

a.. 65℃≤Tp, outdoor fan ceases; Tp≤60℃, outdoor fan resumes; the time from ceasing to resuming is about 45 seconds;

b. 72℃≤Tp, outdoor fan of compressor ceases after 5 seconds; Tp≤64℃, compressor resumes after 3 minutes.

Все каталоги и инструкции здесь: https://splitsystema48.ru/instrukcii-po-ekspluatacii-kondicionerov.html

5-1-10 Compensatory function of power failure

If the unit is suddenly off during running due to power failure, or closed for maintenance or troubleshooting, it will restart to run after the power resumes with the original condition before the unit is off

Note: 1. Function setting: Pressing the SLEEP button on the remote control unit for 10 times until hearing 4 sounds from the buzzer on the panel.

2. Memory content: Running mode, setting wind speed, setting temperature, sleep state, flap state.

3. Cancellation of function: Pressing the SLEEP button on the remote Control unit for 10 times until hearing 2 sounds from the buzzer on the panel.

5-1-11 Trial run function

When the air conditioner is in OFF state, press the emergency switch for 5 seconds till hearing 2 sounds of click from the buzzer, then the air conditioner will turn to the trial run state. The unit will run in the refrigerating mode and the indoor fan will run in high wind speed mode.

5-1-12 Emergency running mode

When the air conditioner is in stand-by state, press the emergency switch till hearing a sound from the buzzer, then the air conditioner will turn to the emergency run state. The rules of emergency run are as follows:

Tr≥23℃, running refrigerating mode, Ts = 26℃;

Tr<23℃, running heating mode, Ts = 23℃.

5-1-13 Temperature compensation

There is the function of automatic temperature compensation when heating,with heating temperature setting = Ts(remote setting) + 4℃.

5-1-14 Sleeping function

a. After setting the sleeping function, the refrigerating mode and dehumidification mode will run as per the following rules:

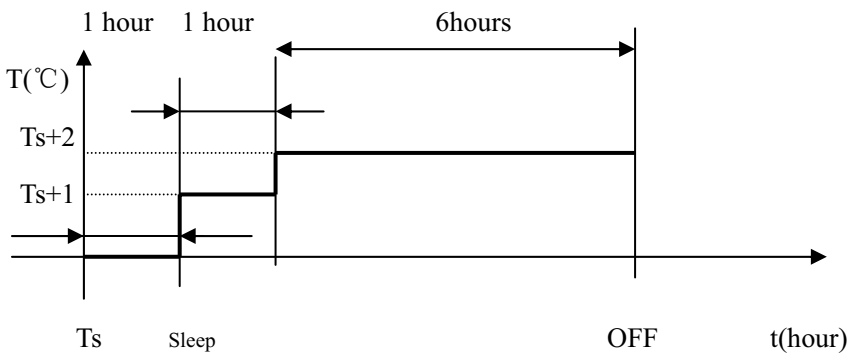

Haier Все каталоги и инструкции здесь: https://splitsystema48.ru/instrukcii-po-ekspluatacii-kondicionerov.html estic Air Conditioner

b.After setting the sleeping function, the heating mode will run as per the following rules:

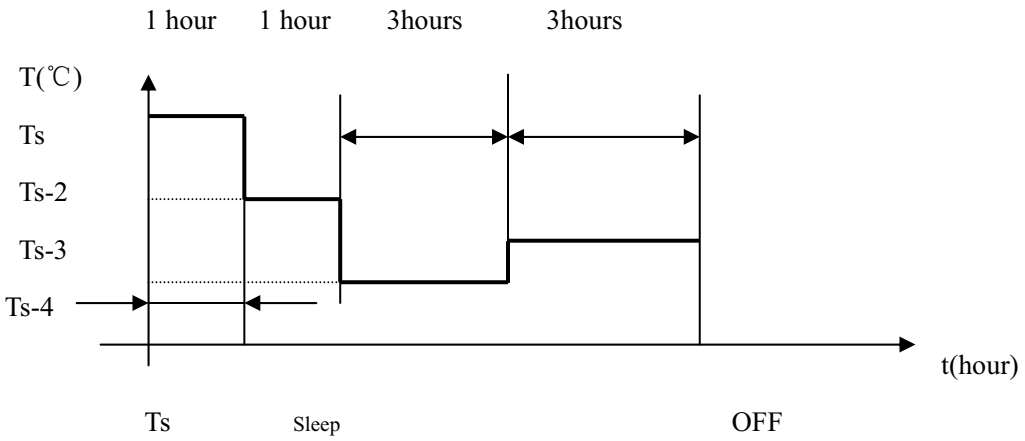

As shown in the above diagram, after running for 1 hour under refrigerating mode and dehumidification mode, the setting temperature will increase 1℃; after another 1 hour, it will increase 1℃ again, and after 6 hours, it will cease; after running for 1 hour under heating mode, the setting temperature will decrease 2℃, after another 1 hour, it will decrease the 2℃ again, and after 3 hours, it will increase 1℃, and after other 3 hours, it will cease.

5-1-15 Executive function after 2 seconds by remoter control:

After receiving remote control signal, the mainboard doesn't enter the corresponding instruction task until 2 seconds elapse.

5-1-16 Timer function:

You can set 24-hour timer on or timer off as required, and the minimum time unit is 1 minute. After setting, a pattern of clock displayed on the LED, and it is off when timer setting is completed. There are several timer mode as follows.

1) Timer on: The pattern of clock displaied on the LED,the background light is off, and unit behaves with halt status. Timer on is completed, and then unit starts running with the pattern of clock disappeared,and the background light is on. The unit starts with the last setting receiving timer signals, and sleep setting is not allowed.

2) Timer off: Unit working, the pattern of clock displaied on the LED; When reaching time setting, unit enters shutdown mode, and sleep function can be set. If timer off and sleep are set synchronously, the one which time is short run first. Executing shutdown instruction clear timer and sleep function.

3) Timer on and timer off can be set synchronously.

5-1-17 Alarm from indoor fan motor:

120 seconds later after the indoor fan motor is charged, and the impulse from fan motor is not detected , then stop outputting voltage to indoor fan motor, send alarm signals.

Все каталоги и инструкции здесь: https://splitsystema48.ru/instrukcii-po-ekspluatacii-kondicionerov.html

5-2 Function of Main Thermistor

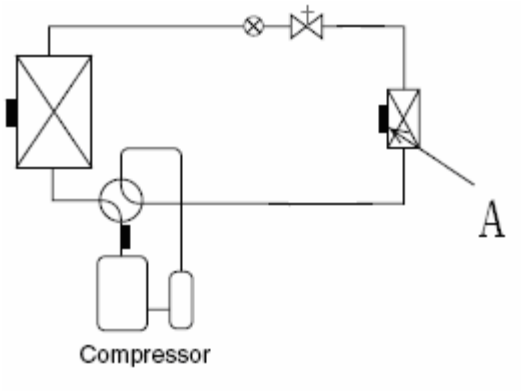

Note: A: Indoor heat-exchange sensor

Indoor heat-exchange sensor

1. The indoor heat exchanger thermistor is used for anti-icing control .During the cooling operation, if the heat exchanger temperature in the room where operation is halted becomes 0°C, it is assumed as icing.
2. The indoor heat exchanger thermistor is used for preventing high temperature and high temperature expiration protection. During the heating operation , When the temp. of coil pipe is above 72℃,compressor and outdoor fan motor stop running 2 seconds later, and inlet air runs as the temp. sensor is off

Все каталоги и инструкции здесь: https://splitsystema48.ru/instrukcii-po-ekspluatacii-kondicionerov.html

5.3 Value of Thermistor

Indoor unit

Room sensor

R25℃=23KΩ±3.5%

B25℃/50℃=4200K±3%

Temp.(℃)	Max.(KΩ)	Normal(KΩ)	Min.(KΩ)	Tolerance(℃)	
-30	568.8372	501.0746	440.8435	-1.97	1.75
-29	530.9600	468.6491	413.1441	-1.95	1.74
-28	495.8488	438.5314	387.3645	-1.93	1.72
-27	463.2850	410.5433	363.3602	-1.91	1.71
-26	433.0683	384.5212	340.9980	-1.90	1.70
-25	405.0156	360.3153	320.1558	-1.88	1.69
-24	378.9588	337.7879	300.7211	-1.86	1.67
-23	354.7440	316.8126	282.5905	-1.84	1.66
-22	332.2300	297.2732	265.6686	-1.82	1.64
-21	311.2873	279.0627	249.8676	-1.80	1.63
-20	291.7969	262.0831	235.1067	-1.78	1.62
-19	273.6494	246.2437	221.3111	-1.76	1.60
-18	256.7445	231.4612	208.4122	-1.74	1.59
-17	240.9897	217.6590	196.3462	-1.72	1.57
-16	226.3000	204.7662	185.0545	-1.70	1.56
-15	212.5973	192.7176	174.4829	-1.68	1.54
-14	199.8093	181.4531	164.5813	-1.66	1.53
-13	187.8698	170.9169	155.3033	-1.64	1.51
-12	176.7176	161.0578	146.6059	-1.62	1.49
-11	166.2961	151.8284	138.4495	-1.60	1.48
-10	156.5532	143.1847	130.7973	-1.58	1.46
-9	147.4409	135.0863	123.6153	-1.56	1.44
-8	138.9148	127.4956	116.8717	-1.53	1.43
-7	130.9337	120.3778	110.5374	-1.51	1.41
-6	123.4597	113.7009	104.5852	-1.49	1.39
-5	116.4577	107.4349	98.9897	-1.47	1.38
-4	109.8953	101.5523	93.7278	-1.45	1.36
-3	103.7422	96.0274	88.7774	-1.43	1.34
-2	97.9708	90.8365	84.1185	-1.40	1.32
-1	92.5551	85.9574	79.7322	-1.38	1.30
0	87.4712	81.3697	75.6011	-1.36	1.29
1	82.6970	77.0544	71.7088	-1.34	1.27
2	78.2118	72.9937	68.0402	-1.31	1.25
3	73.9966	69.1712	64.5813	-1.29	1.23
4	70.0335	65.5716	61.3188	-1.27	1.21
5	66.3062	62.1807	58.2405	-1.24	1.19
6	62.7992	58.9853	55.3351	-1.22	1.17

Все каталоги и инструкции здесь:

7	59.4984	55.9729	52.5917	-1.20	1.15
8	56.3905	53.1320	50.0006	-1.17	1.13
9	53.4631	50.4521	47.5523	-1.15	1.11
10	50.7048	47.9230	45.2384	-1.13	1.09
11	48.1049	45.5355	43.0505	-1.10	1.07
12	45.6534	43.2808	40.9813	-1.08	1.04
13	43.3410	41.1509	39.0236	-1.05	1.02
14	41.1592	39.1381	37.1708	-1.03	1.00
15	39.0998	37.2355	35.4167	-1.00	0.98
16	37.1553	35.4363	33.7555	-0.98	0.96
17	35.3186	33.7344	32.1818	-0.95	0.94
18	33.5833	32.1240	30.6905	-0.93	0.91
19	31.9432	30.5997	29.2769	-0.90	0.89
20	30.3925	29.1565	27.9365	-0.88	0.87
21	28.9259	27.7895	26.6651	-0.85	0.84
22	27.5383	26.4944	25.4589	-0.83	0.82
23	26.2252	25.2670	24.3140	-0.80	0.80
24	24.9822	24.1034	23.2271	-0.78	0.77
25	23.8050	23.0000	22.1950	-0.78	0.77
26	22.7500	21.9499	21.1520	-0.78	0.78
27	21.7477	20.9536	20.1638	-0.82	0.81
28	20.7951	20.0081	19.2272	-0.86	0.85
29	19.8895	19.1104	18.3394	-0.89	0.88
30	19.0285	18.2581	17.4974	-0.93	0.92
31	18.2094	17.4484	16.6988	-0.97	0.95
32	17.4302	16.6792	15.9410	-1.00	0.99
33	16.6885	15.9480	15.2217	-1.04	1.02
34	15.9825	15.2530	14.5389	-1.08	1.06
35	15.3103	14.5920	13.8903	-1.12	1.09
36	14.6700	13.9632	13.2743	-1.16	1.13
37	14.0599	13.3650	12.6889	-1.20	1.16
38	13.4786	12.7957	12.1325	-1.23	1.20
39	12.9244	12.2537	11.6035	-1.27	1.24
40	12.3960	11.7375	11.1004	-1.31	1.27
41	11.8921	11.2459	10.6218	-1.35	1.31
42	11.4113	10.7775	10.1665	-1.39	1.34
43	10.9526	10.3311	9.7330	-1.43	1.38
44	10.5147	9.9056	9.3204	-1.48	1.42
45	10.0967	9.4999	8.9275	-1.52	1.45
46	9.6976	9.1130	8.5532	-1.56	1.49
47	9.3163	8.7439	8.1965	-1.60	1.53
48	8.9521	8.3916	7.8566	-1.64	1.57
49	8.6040	8.0554	7.5327	-1.68	1.60
50	8.2713	7.7345	7.2237	-1.73	1.64
51	7.9531	7.4280	6.9291	-1.77	1.68
52	7.6489	7.1353	6.6480	-1.81	1.72

Haier Все каталоги и инструкции здесь: Domestic Air Conditioner

53	7.3580	6.8556	6.3797	-1.85	1.76
54	7.0796	6.5884	6.1237	-1.90	1.79
55	6.8131	6.3329	5.8793	-1.94	1.83
56	6.5581	6.0887	5.6459	-1.99	1.87
57	6.3140	5.8552	5.4230	-2.03	1.91
58	6.0802	5.6318	5.2100	-2.07	1.95
59	5.8563	5.4181	5.0065	-2.12	1.99
60	5.6417	5.2136	4.8120	-2.16	2.03
61	5.4361	5.0178	4.6260	-2.21	2.07
62	5.2391	4.8304	4.4481	-2.25	2.11
63	5.0502	4.6510	4.2780	-2.30	2.15
64	4.8691	4.4791	4.1153	-2.35	2.19
65	4.6954	4.3145	3.9596	-2.39	2.23
66	4.5287	4.1567	3.8105	-2.44	2.27
67	4.3689	4.0055	3.6678	-2.49	2.31
68	4.2154	3.8605	3.5312	-2.53	2.35
69	4.0682	3.7216	3.4004	-2.58	2.39
70	3.9268	3.5883	3.2750	-2.63	2.43
71	3.7910	3.4605	3.1549	-2.68	2.48
72	3.6606	3.3378	3.0398	-2.73	2.52
73	3.5353	3.2201	2.9294	-2.77	2.56
74	3.4150	3.1072	2.8237	-2.82	2.60
75	3.2993	2.9987	2.7222	-2.87	2.64
76	3.1881	2.8946	2.6249	-2.92	2.68
77	3.0812	2.7946	2.5316	-2.97	2.73
78	2.9785	2.6986	2.4420	-3.02	2.77
79	2.8796	2.6063	2.3560	-3.07	2.81
80	2.7845	2.5176	2.2735	-3.12	2.86
81	2.6931	2.4324	2.1943	-3.17	2.90
82	2.6050	2.3505	2.1182	-3.22	2.94
83	2.5203	2.2717	2.0451	-3.28	2.99
84	2.4388	2.1960	1.9749	-3.33	3.03
85	2.3602	2.1231	1.9075	-3.38	3.07
86	2.2846	2.0530	1.8426	-3.43	3.12
87	2.2118	1.9856	1.7803	-3.48	3.16
88	2.1416	1.9207	1.7204	-3.54	3.20
89	2.0740	1.8582	1.6628	-3.59	3.25
90	2.0089	1.7981	1.6074	-3.64	3.29
91	1.9461	1.7402	1.5541	-3.70	3.34
92	1.8856	1.6844	1.5028	-3.75	3.38
93	1.8272	1.6307	1.4535	-3.80	3.43
94	1.7709	1.5789	1.4060	-3.86	3.47
95	1.7166	1.5291	1.3603	-3.91	3.52
96	1.6643	1.4810	1.3163	-3.97	3.56
97	1.6138	1.4347	1.2739	-4.02	3.61

Все каталоги и инструкции здесь: https://splitsystema48.ru/instrukcii-po-ekspluatacii-kondicionerov.html

98	1.5650	1.3900	1.2331	-4.08	3.66
99	1.5180	1.3470	1.1937	-4.13	3.70
100	1.4726	1.3054	1.1559	-4.19	3.75
101	1.4287	1.2654	1.1194	-4.24	3.80
102	1.3864	1.2268	1.0842	-4.30	3.84
103	1.3455	1.1895	1.0503	-4.36	3.89
104	1.3060	1.1535	1.0176	-4.42	3.94
105	1.2679	1.1188	0.9860	-4.47	3.98
106	1.2310	1.0853	0.9556	-4.53	4.03
107	1.1954	1.0529	0.9263	-4.59	4.08
108	1.1610	1.0217	0.8980	-4.65	4.13
109	1.1277	0.9915	0.8707	-4.70	4.17
110	1.0955	0.9624	0.8443	-4.76	4.22
111	1.0644	0.9342	0.8189	-4.82	4.27
112	1.0344	0.9070	0.7943	-4.88	4.32
113	1.0053	0.8807	0.7706	-4.94	4.37
114	0.9771	0.8553	0.7478	-5.00	4.41
115	0.9499	0.8307	0.7256	-5.06	4.46
116	0.9235	0.8070	0.7043	-5.12	4.51
117	0.8980	0.7840	0.6837	-5.18	4.56
118	0.8734	0.7618	0.6637	-5.24	4.61
119	0.8495	0.7404	0.6445	-5.30	4.66
120	0.8263	0.7196	0.6258	-5.36	4.71

Все каталоги и инструкции здесь: https://splitsystema48.ru/instrukcii-po-ekspluatacii-kondicionerov.html

Pipe Sensor

R25℃=10KΩ ±3%

B25℃/50℃=3700K±3%

Temp.((℃))	Max.(KΩ)	Normal(KΩ)	Min.(KΩ)	Tolerance(℃)	
-30	165.2170	147.9497	132.3678	-1.94	1.75
-29	155.5754	139.5600	125.0806	-1.93	1.74
-28	146.5609	131.7022	118.2434	-1.91	1.73
-27	138.1285	124.3392	111.8256	-1.89	1.71
-26	130.2371	117.4366	105.7989	-1.87	1.70
-25	122.8484	110.9627	100.1367	-1.85	1.69
-24	115.9272	104.8882	94.8149	-1.83	1.67
-23	109.4410	99.1858	89.8106	-1.81	1.66
-22	103.3598	93.8305	85.1031	-1.80	1.64
-21	97.6556	88.7989	80.6728	-1.78	1.63
-20	92.3028	84.0695	76.5017	-1.76	1.62
-19	87.2775	79.6222	72.5729	-1.74	1.60
-18	82.5577	75.4384	68.8710	-1.72	1.59
-17	78.1230	71.5010	65.3815	-1.70	1.57
-16	73.9543	67.7939	62.0907	-1.68	1.55
-15	70.0342	64.3023	58.9863	-1.66	1.54
-14	66.3463	61.0123	56.0565	-1.64	1.52
-13	62.8755	57.9110	53.2905	-1.62	1.51
-12	59.6076	54.9866	50.6781	-1.60	1.49
-11	56.5296	52.2278	48.2099	-1.58	1.47
-10	53.6294	49.6244	45.8771	-1.56	1.46
-9	50.8956	47.1666	43.6714	-1.54	1.44
-8	48.3178	44.8454	41.5851	-1.51	1.42
-7	45.8860	42.6525	39.6112	-1.49	1.40
-6	43.5912	40.5800	37.7429	-1.47	1.39
-5	41.4249	38.6207	35.9739	-1.45	1.37
-4	39.3792	36.7676	34.2983	-1.43	1.35
-3	37.4465	35.0144	32.7108	-1.41	1.33
-2	35.6202	33.3552	31.2062	-1.38	1.31
-1	33.8936	31.7844	29.7796	-1.36	1.29
0	32.2608	30.2968	28.4267	-1.34	1.28
1	30.7162	28.8875	27.1431	-1.32	1.26
2	29.2545	27.5519	25.9250	-1.29	1.24
3	27.8708	26.2858	24.7686	-1.27	1.22
4	26.5605	25.0851	23.6704	-1.25	1.20
5	25.3193	23.9462	22.6273	-1.23	1.18
6	24.1432	22.8656	21.6361	-1.20	1.16
7	23.0284	21.8398	20.6939	-1.18	1.14
8	21.9714	20.8659	19.7982	-1.15	1.12
9	20.9688	19.9409	18.9463	-1.13	1.09
10	20.0176	19.0621	18.1358	-1.11	1.07
11	19.1149	18.2270	17.3646	-1.08	1.05

Все каталоги и инструкции здесь: https://splitsystema48.ru/instrukcii-po-ekspluatacii-kondicionerov.html

12	18.2580	17.4331	16.6305	-1.06	1.03
13	17.4442	16.6782	15.9315	-1.03	1.01
14	16.6711	15.9601	15.2657	-1.01	0.99
15	15.9366	15.2770	14.6315	-0.98	0.96
16	15.2385	14.6268	14.0271	-0.96	0.94
17	14.5748	14.0079	13.4510	-0.93	0.92
18	13.9436	13.4185	12.9017	-0.91	0.90
19	13.3431	12.8572	12.3778	-0.88	0.87
20	12.7718	12.3223	11.8780	-0.86	0.85
21	12.2280	11.8126	11.4011	-0.83	0.83
22	11.7102	11.3267	10.9459	-0.81	0.80
23	11.2172	10.8634	10.5114	-0.78	0.78
24	10.7475	10.4216	10.0964	-0.75	0.75
25	10.3000	10.0000	9.7000	-0.75	0.75
26	9.8975	9.5974	9.2980	-0.76	0.76
27	9.5129	9.2132	8.9148	-0.80	0.80
28	9.1454	8.8465	8.5496	-0.84	0.83
29	8.7942	8.4964	8.2013	-0.87	0.86
30	8.4583	8.1621	7.8691	-0.91	0.90
31	8.1371	7.8428	7.5522	-0.95	0.93
32	7.8299	7.5377	7.2498	-0.98	0.97
33	7.5359	7.2461	6.9611	-1.02	1.00
34	7.2546	6.9673	6.6854	-1.06	1.04
35	6.9852	6.7008	6.4222	-1.10	1.07
36	6.7273	6.4459	6.1707	-1.13	1.11
37	6.4803	6.2021	5.9304	-1.17	1.14
38	6.2437	5.9687	5.7007	-1.21	1.18
39	6.0170	5.7454	5.4812	-1.25	1.22
40	5.7997	5.5316	5.2712	-1.29	1.25
41	5.5914	5.3269	5.0704	-1.33	1.29
42	5.3916	5.1308	4.8783	-1.37	1.33
43	5.2001	4.9430	4.6944	-1.41	1.36
44	5.0163	4.7630	4.5185	-1.45	1.40
45	4.8400	4.5905	4.3500	-1.49	1.44
46	4.6708	4.4252	4.1887	-1.53	1.47
47	4.5083	4.2666	4.0342	-1.57	1.51
48	4.3524	4.1145	3.8862	-1.61	1.55
49	4.2026	3.9686	3.7443	-1.65	1.59
50	4.0588	3.8287	3.6084	-1.70	1.62
51	3.9206	3.6943	3.4780	-1.74	1.66
52	3.7878	3.5654	3.3531	-1.78	1.70
53	3.6601	3.4416	3.2332	-1.82	1.74
54	3.5374	3.3227	3.1183	-1.87	1.78
55	3.4195	3.2085	3.0079	-1.91	1.82
56	3.3060	3.0989	2.9021	-1.95	1.85
57	3.1969	2.9935	2.8005	-2.00	1.89

Все каталоги и инструкции здесь: https://splitsystema48.ru/instrukcii-po-ekspluatacii-kondicionerov.html

58	3.0919	2.8922	2.7029	-2.04	1.93
59	2.9909	2.7948	2.6092	-2.08	1.97
60	2.8936	2.7012	2.5193	-2.13	2.01
61	2.8000	2.6112	2.4328	-2.17	2.05
62	2.7099	2.5246	2.3498	-2.22	2.09
63	2.6232	2.4413	2.2700	-2.26	2.13
64	2.5396	2.3611	2.1932	-2.31	2.17
65	2.4591	2.2840	2.1195	-2.36	2.21
66	2.3815	2.2098	2.0486	-2.40	2.25
67	2.3068	2.1383	1.9803	-2.45	2.29
68	2.2347	2.0695	1.9147	-2.49	2.34
69	2.1652	2.0032	1.8516	-2.54	2.38
70	2.0983	1.9393	1.7908	-2.59	2.42
71	2.0337	1.8778	1.7324	-2.63	2.46
72	1.9714	1.8186	1.6761	-2.68	2.50
73	1.9113	1.7614	1.6219	-2.73	2.54
74	1.8533	1.7064	1.5697	-2.78	2.58
75	1.7974	1.6533	1.5194	-2.83	2.63
76	1.7434	1.6021	1.4710	-2.88	2.67
77	1.6913	1.5528	1.4243	-2.92	2.71
78	1.6409	1.5051	1.3794	-2.97	2.75
79	1.5923	1.4592	1.3360	-3.02	2.80
80	1.5454	1.4149	1.2942	-3.07	2.84
81	1.5000	1.3721	1.2540	-3.12	2.88
82	1.4562	1.3308	1.2151	-3.17	2.93
83	1.4139	1.2910	1.1776	-3.22	2.97
84	1.3730	1.2525	1.1415	-3.27	3.01
85	1.3335	1.2153	1.1066	-3.32	3.06
86	1.2953	1.1794	1.0730	-3.38	3.10
87	1.2583	1.1448	1.0405	-3.43	3.15
88	1.2226	1.1113	1.0092	-3.48	3.19
89	1.1880	1.0789	0.9789	-3.53	3.24
90	1.1546	1.0476	0.9497	-3.58	3.28
91	1.1223	1.0174	0.9215	-3.64	3.33
92	1.0910	0.9882	0.8942	-3.69	3.37
93	1.0607	0.9599	0.8679	-3.74	3.42
94	1.0314	0.9326	0.8424	-3.80	3.46
95	1.0030	0.9061	0.8179	-3.85	3.51
96	0.9756	0.8806	0.7941	-3.90	3.55
97	0.9490	0.8558	0.7711	-3.96	3.60
98	0.9232	0.8319	0.7489	-4.01	3.64
99	0.8983	0.8088	0.7275	-4.07	3.69
100	0.8741	0.7863	0.7067	-4.12	3.74
101	0.8507	0.7646	0.6867	-4.18	3.78
102	0.8281	0.7436	0.6672	-4.23	3.83
103	0.8061	0.7233	0.6484	-4.29	3.88

Все каталоги и инструкции здесь: https://splitsystema48.ru/instrukcii-po-ekspluatacii-kondicionerov.html

104	0.7848	0.7036	0.6303	-4.34	3.92
105	0.7641	0.6845	0.6127	-4.40	3.97
106	0.7441	0.6661	0.5957	-4.46	4.02
107	0.7247	0.6482	0.5792	-4.51	4.07
108	0.7059	0.6308	0.5632	-4.57	4.12
109	0.6877	0.6140	0.5478	-4.63	4.16
110	0.6700	0.5977	0.5328	-4.69	4.21
111	0.6528	0.5820	0.5183	-4.74	4.26
112	0.6361	0.5667	0.5043	-4.80	4.31
113	0.6200	0.5518	0.4907	-4.86	4.36
114	0.6043	0.5374	0.4775	-4.92	4.41
115	0.5891	0.5235	0.4648	-4.98	4.45
116	0.5743	0.5100	0.4524	-5.04	4.50
117	0.5600	0.4968	0.4404	-5.10	4.55
118	0.5460	0.4841	0.4288	-5.16	4.60
119	0.5325	0.4717	0.4175	-5.22	4.65
120	0.5194	0.4597	0.4066	-5.28	4.70

Все каталоги и инструкции здесь: https://splitsystema48.ru/instrukcii-po-ekspluatacii-kondicionerov.html

6. System Configuration

6.1 System Configuration

After the installation and test operation of the room air conditioner have been completed, it should be operated and handled as described below. Every user would like to know the correct method of operation of the room air conditioner, to check if it is capable of cooling (or heating) well, and to know a clever method of using it.In order to meet this expectation of the users, giving sufficient explanations taking enough time can be said to reduce about 80% of the requests for servicing. However good the installation work is and however good the functions are, the customer may blame either the room air conditioner or its installation work because of improper handling. The installation work and handing over of the unit can only be considered to have been completed when its handling has been explained to the user without using technical terms but giving full knowledge of the equipment.

Все каталоги и инструкции здесь: https://splitsystema48.ru/instrukcii-po-ekspluatacii-kondicionerov.html

6.2 Instruction

Cautions

Disposal of the old air conditioner

Before disposing an old air conditioner that goes out of use, please make sure it's inoperative and safe. Unplug the air conditioner in order to avoid the risk of child entrapment.

It must be noticed that air conditioner system contains refrigerants, which require specialized waste disposal. The valuable materials contained in an air conditioner can be recycled .Contact your local waste disposal center for proper disposal of an old air conditioner and contact your local authority or your dealer if you have any question. Please ensure that the pipework of your air conditioner does not get damagedprior to being picked up by the relevant waste disposal center, and contribute to environmental awareness by insisting on an appropriate, anti-pollution method of disposal.

Disposal of the packaging of your new air conditioner

All the packaging materials employed in the package of your new air conditioner may be disposed without any danger to the environment.

The cardboard box may be broken or cut into smaller pieces and given to a waste paper disposal service. The wrapping bag made of polyethylene and the polyethylene foam pads contain no fluorochloric hydrocarbon.

All these valuable materials may be taken to a waste collecting center and used again after adequate recycling.

Consult your local authorities for the name and address of the waste materials collecting centers and waste paper disposal services nearest to your house.

Safety Instructions and Warnings

Before starting the air conditioner, read the information given in the User's Guide carefully. The User's Guide contains very important observations relating to the assembly, operation and maintenance of the air conditioner.

The manufacturer does not accept responsibility for any damages that may arise due to non-observation of the following instruction.

- Damaged air conditioners are not to be put into operation. In case of doubt, consult your supplier.
- Use of the air conditioner is to be carried out in strict compliance with the relative instructions set forth in the User's Guide.
- Installation shall be done by professional people, don't install unit by yourself.
- For the purpose of the safety,the air conditioner must be properly grounded in accordance with specifications.
- Always remember to unplug the air conditioner before openning inlet grill. Never unplug your air conditioner by pulling on the power cord. Always grip plug firmly and pull straight out from the outlet.
- All electrical repairs must be carried out by qualified electricians. Inadequate repairs may result in a major source of danger for the user of the air conditioner.
- Do not damage any parts of the air conditioner that carry refrigerant by piercing or performating the air conditioner's tubes with sharp or pointed items, crushing or twisting any tubes, or scraping the coatings off the surfaces. If the refrigerant spurts out and gets into eyes, it may result in serious eye injuries.

Все каталоги и инструкции здесь: https://splitsystema48.ru/instrukcii-po-ekspluatacii-kondicionerov.html

Cautions

- Do not obstruct or cover the ventilation grille of the air conditoner.Do not put fingers or any other things into the inlet/outlet and swing louver.

- Do not allow children to play with the air conditioner.In no case should children be allowed to sit on the outdoor unit.

Specifications

- The refrigerating circuit is leak-proof.

The machine is adaptive in following situation

1.Applicable ambient temperature range:

Cooling	Indoor	Maximum:D.B/W.B	32°C/23°C
		Minimum:D.B/W.B	18°C/14°C
	Outdoor	Maximum:D.B/W.B	43°C/26°C
		Minimum:D.B	18°C
Heating	Indoor	Maximum:D.B	27°C
		Minimum:D.B	15°C
	Outdoor	Maximum:D.B/W.B	24°C/18°C
		Minimum:D.B/W.B	-7°C/-8°C

2. If the power supply cord is damaged, it must be replaced by the manufacturer or its service agent or a similar qualified person.

3. If the fuse of indoor unit on PC board is broken,please change it with the type of T. 3.15A/ 250V. If the fuse of outdoor unit is broken,change it with the type of T.25A/250V

4. The wiring method should be in line with the local wiring standard.

5. After installation, the power plug should be easily reached.

6. The waste battery should be disposed properly.

7. The appliance is not intended for use by young children or infirm persons without supervision.

8. Young children should be supervised to ensure that they do not play with the applience.

9.Please employ the proper power plug, which fit into the power supply cord.

10 .The power plug and connecting cable must have acquired the local attestation.

11.In order to protect the units,please turn off the A/C first, and at least 30 seconds later, cutting off the power.

Все каталоги и инструкции здесь: https://splitsystema48.ru/instrukcii-po-ekspluatacii-kondicionerov.html

Cautions

Safety Instruction

- Please read the following Safety Instructions carefully prior to use.
- The instructions are classified into two levels, WARNING and CAUTION according to the seriousness of possible risks and damages as follows. Compliance to the instructions are strictly required for safety use.

Installation

⚠ WARNING

Please call Sales/Service Shop for the Installation.
Do not attempt to install the air conditioner by yourself because improper works may cause electric shock, fire, water leakage.

Installation in a inadequate place may cause accidents. Do not install in the following place.

⚠ CAUTION

Connect the earth cable. 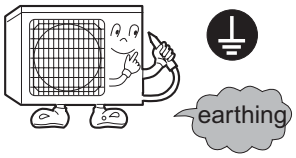	Do not install in the place where there is any possibility of inflammable gas leakage around the unit. PROHIBITION	Do not get the unit exposed to vapor or oil steam. PROHIBITION	Check proper installation of the drainage securely STRICT ENFORCEMENT 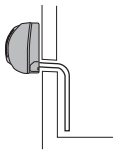

Все каталоги и инструкции здесь: https://splitsystema48.ru/instrukcii-po-ekspluatacii-kondicionerov.html

Cautions

⚠ WARNING

When abnormality such as burnt-small found, immediately stop the operation button and contact sales shop.

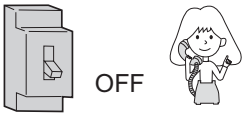

STRICT ENFORCEMENT

Use an exclusive power source with a circuit breaker

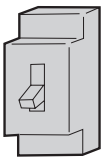

Connect power supply cord to the outlet completely

STRICT ENFORCEMENT

Use the proper voltage

STRICT ENFORCEMENT

Do not use power supply cord extended or connected in halfway

PROHIBITION

Do not use power supply cord in a bundle.

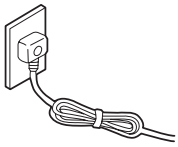

PROHIBITION

Take care not to damage the power supply cord.

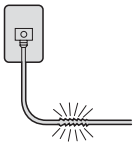

PROHIBITION

Do not insert objects into the air inlet or outlet.

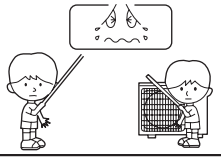

PROHIBITION

Do not start or stop the operation by disconnecting the power supply cord and so on.

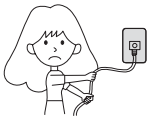

PROHIBITION

Do not channel the air flow directly at people, especially at infants or the aged.

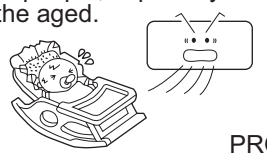

PROHIBITION

Do not try to repair or reconstruct by yourself.

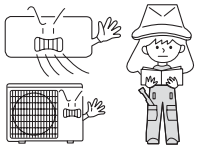

⚠ CAUTION

Do not use for the purpose of storage of food, art work, precise equipment, breeding, or cultivation.

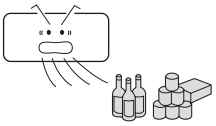

PROHIBITION

Take fresh air occasionally especially when gas appliance is running at the same time.

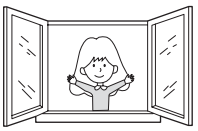

STRICT ENFORCEMENT

Do not operate the switch with wet hand.

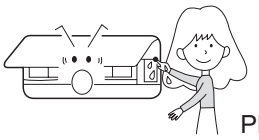

PROHIBITION

Do not install the unit near a fireplace or other heating apparatus.

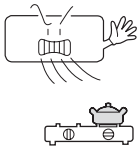

PROHIBITION

Check good condition of the installation stand

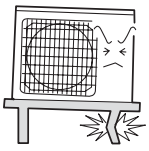

PROHIBITION

Do not pour water onto the unit for cleaning

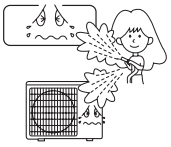

PROHIBITION

Do not place animals or plants in the direct path of the air flow

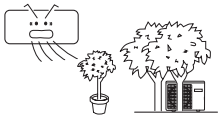

PROHIBITION

Do not place any objects on or climb on the unit.

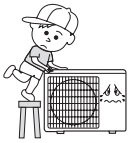

PROHIBITION

Do not place flower vase or water containers on the top of the unit.

PROHIBITION

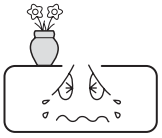

Все каталоги и инструкции здесь: https://splitsystema48.ru/instrukcii-po-ekspluatacii-kondicionerov.html

Parts and Functions

Indoor unit

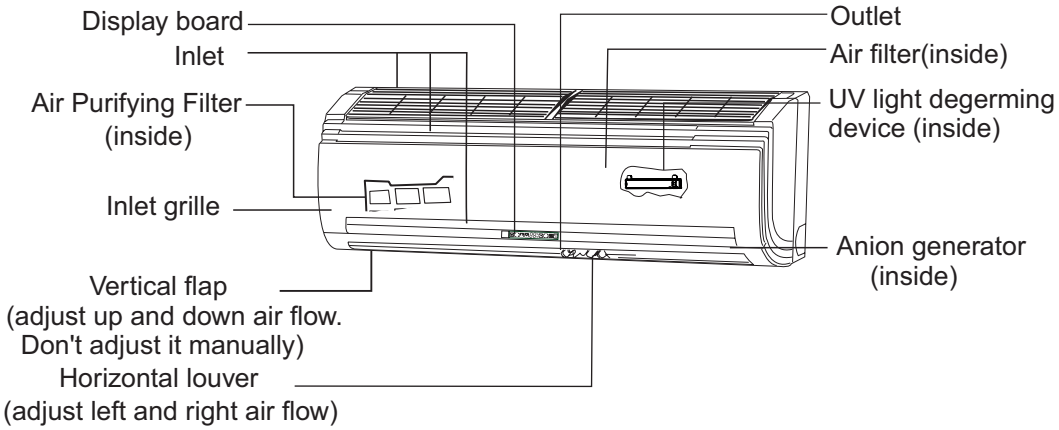

Outdoor unit

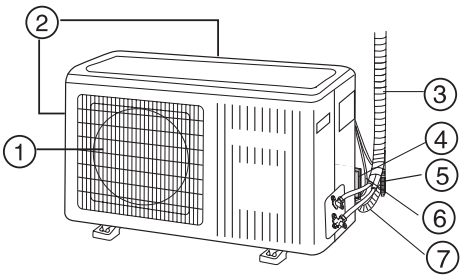

① OUTLET
② INLET
③ CONNECTING PIPING AND ELECTRICAL WIRING
④ CHANGE-FOR-FRESH-AIR BOX
⑤ CHANGE-FOR-FRESH-AIR TUBE
⑥ CHANGE FOR FRESH AIR SIGNAL WIRE
⑦ DRAIN HOSE

Все каталоги и инструкции здесь: https://splitsystema48.ru/instrukcii-po-ekspluatacii-kondicionerov.html

Parts and Functions

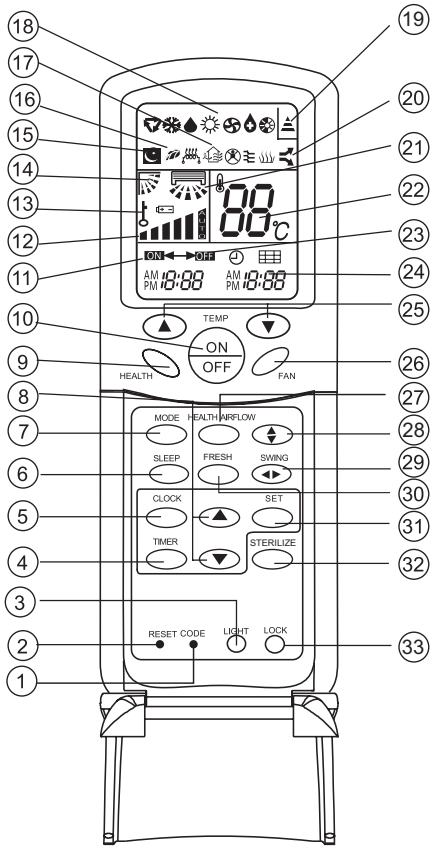

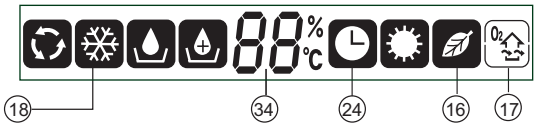

1.CODE
Used to select CODE A or B with a press,A or B will be displayed on LCD.
Please select A without special explanation.

2.RESET
When the remote controller appears abnormal, use a sharp pointed article to press this button to reset the remote controller normal.

3.LIGHT button
Control the lightening and extinguishing of the indoor LCD display board.

4. TIMER button
Used to select TIMER ON, TIMER OFF, TIMER ON-OFF.

5. CLOCK button
Used to set correct time.

6. SLEEP button
Used to select sleep mode.

7. MODE button

8. HOUR button
Used to set clock and timer setting.

9. HEALTH button
Used to set healthy operation.

10. ON/OFF button
Used for unit start and stop.

11. TIMER ON display

12. FAN SPEED display

13. LOCK display
14. SWING UP/DOWN display
15. SLEEP display
16. HEALTH display
17.FRESH AIR display
18. Operation mode display

Operation mode	AUTO	COOL	DRY	HEAT	FAN
Remote controller					
Display board					

19.Singal sending display
20. UV light degerming function display
21. Left/right air flow display
22. TEMP display
Remote controller: to display the TEMP. setting.
23. TIMER OFF display
24. CLOCK display
25. TEMP button
Used to select your desired temperature.
26. FAN button
Used to select fan speed: LOW,MED, HI, AUTO.
27. HEALTH AIRFLOW button
Used to set the health airflow mode.
28. SWING UP/DOWN button
Used to select up or down air sending direction.
29. SWING LEFT/RIGHT button
Used to select left/right air flow.
30. FRESH button
Use to set fresh air function.
31. SET button
Used to confirm timer and clock settings.
32. STERILIZE button
Use to set UV light degerming function.
33. LOCK
Used to lock buttons and LCD display. If pressed, the other buttons will be disabled and the lock condition display appears. Press it once again, lock will be canceled and lock condition display disappears.
34. Ambient temp.display
To display the Ambient temp.

NOTE:(1) The following functions and related displays are not available:①
(2) Cooling only unit do not have functions and displays related with heating.
(3) The fresh function is only for the models ZXF.

Все каталоги и инструкции здесь: https://splitsystema48.ru/instrukcii-po-ekspluatacii-kondicionerov.html

Parts and Functions

■ Clock Set

When unit is started for the first time and after replacing batteries in remote controller, clock should be adjusted as follows:

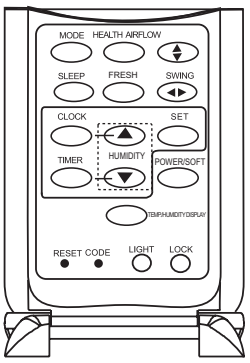

1. Press CLOCK button,"AM" or "PM" flashes.
2. Press△ or▽ to set correct time. Each press will increase or decrease 1 min. If the button is kept depressed, time will change quickly.
3. After time setting is confirmed, press SET, "AM" or "PM" stop flashing, while clock starts working.

■ Remote controller's operation

- When in use, put the signal transmission head directly to the receiver hole on the indoor unit.
- The distance between the signal transmission head and the receiver hole should be within 7m without any obstacle as well.
- Don't throw or knock the remoter controller.
- When electronic-started type fluorescent lamp or change-over type fluorescent lamp or wireless telephone is installed in the room, the receiver is apt to be disturbed in receiving the signals, so the distance to the indoor unit should be shorter.

■ Loading of the battery

Load the batteries as illustrated right
2 R-03 (7#) batteries

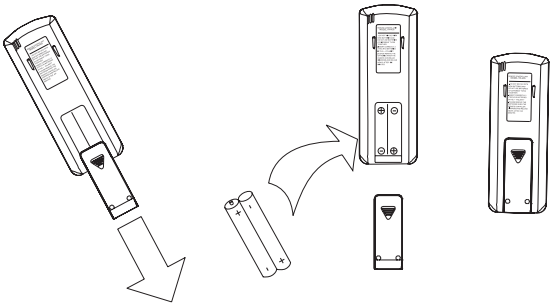

Remove the battery cover:
Slightly press" ⊽ "area and push down the cover as illustrated.

Load the battery:
Be sure that the loading is in line with the "+" / "-". request as illustrated on the bottom of the case.

Put on the cover again.

Confirmation indicator:
After pressing power ON/OFF, if no display, reload the batteries.

Note:
- Full display or unclear display during operation indicates the batteries have been used up. Please change batteries.
- Used two new same-typed batteries when loading.
- If the remote controller can't run normally during operation, please remove the batteries and reload several minutes later.

Hint:
Remove the batteries in case unit won't be in usage for a long period. If there are any display after taking-out, just need to press reset key.

Все каталоги и инструкции здесь: https://splitsystema48.ru/instrukcii-po-ekspluatacii-kondicionerov.html

Operation

HEALTH operation

Remote controller

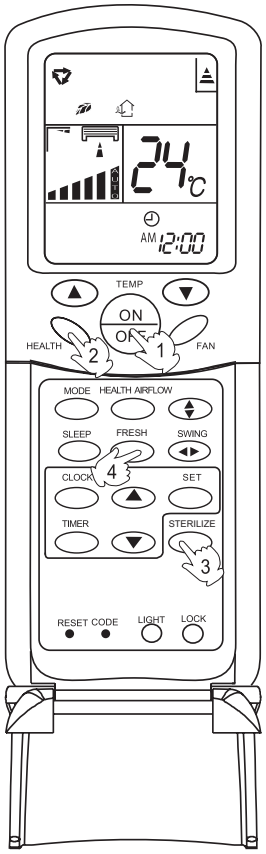

Note:
when the unit is operating health or sterilize function," " displayed on the display board and " " is displayed on the display board in the fresh function.

1.Unit start
Press ON/OFF on the remote controller, unit starts.
Health function includes health anion function, UV light degerming function.

2.Health anion function
Press HEALTH button. For each press, is displayed.
Air conditioner starts health anion function operation.
For twice press, disappears,the operation stops.

3.UV light degerming function
Press STERILIZE button ," "and " "displayed on the remote controller and the air conditioning starts the UV light degerming function.
" ": For timing operation of UV light degerming function and automatically canceled after 30 minutes' operation.
" ": For the long-time running of UV light degerming function.
No display: For UV light degerming function not starting.

4.Change-for-fresh-air function
Press FRESH button , " "displayed on the remote controller and the change-for-fresh-air function operation begins.
For twice press , the display " "disappears and the change-for-fresh-air function operation is canceled

When indoor fan motor is running, it has healthy process function. (It's available under any mode)

When the fan in the indoor unit does not work, the health lamp lights up, but the anion generator does not release anion.

BRIEF INTRODUCTION TO HEALTH ANION FUCTION
The anion generator in the air conditioner can generate a lot of anion effectively balance the quantity of position and anion in the air and also to kill bacteria and speed up the dust sediment in the room and finally clean the air in the room.

About UV light degerming function
UV light emitted by the UV light device of the indoor unit catalytically activates the nano TiO_2 on the multi-lights touching intermediary, and the degerming effect is highly efficient and lasting.
Note: when the function is running, don't open the inlet grille.

About change-for-fresh-air function
1.After the change-for-fresh-air function is initiated, the outside air can enter the indoors through the change-for-fresh-air tube thereby keeping the indoor air fresh.
2.Setting the change-for-fresh-air function under the shutdown status: Under shutdown status, press the fresh air key and the remote controller displays the on status of air flow, low wind, and change-for-fresh-air functions, and now can set the timing open, timing close and time control switch. Press on-off button to cancel the change-for-fresh-air function.

Все каталоги и инструкции здесь: https://splitsystema48.ru/instrukcii-po-ekspluatacii-kondicionerov.html

Operation

Auto Operation

Remote controller

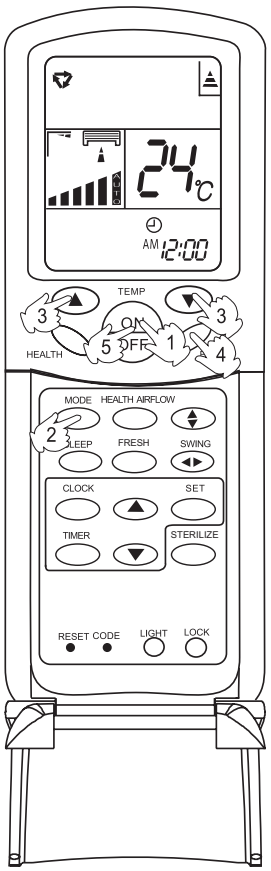

1. Unit start

Press ON/OFF on the remote controller, unit starts.

2.Select operation mode

Press MODE button. For each press, operation mode changes as follows:

Remote controller:

Then | Select Auto operation |

3.Select temp.setting

Press TEMP. button

△ Every time the button is pressed, temp.setting increase 1°C,if kept depressed, it will increase rapidly

▽ Every time the button is pressed, temp.setting decrease 1°C,if kept depressed, it will decrease rapidly

Select a desired temperature.

4.Fan speed selection

Press FAN button. For each press, fan speed changes as follows:

Remote controller:

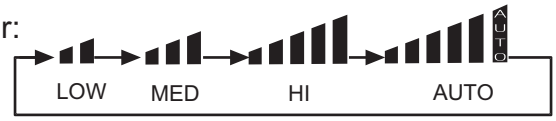

Air conditioner is running under displayed fan speed. When FAN is set to AUTO, the air conditioner automatically adjusts the fan speed according to room temperature.

5.Unit stop

Press ON/OFF button, the unit stops.

About Auto Operation

Under the mode of auto operation, air conditioner will automatically select Cool or Heat operation according to room temperature and setting temperature.

Все каталоги и инструкции здесь: https://splitsystema48.ru/instrukcii-po-ekspluatacii-kondicionerov.html

Operation

Cool Operation

Remote controller

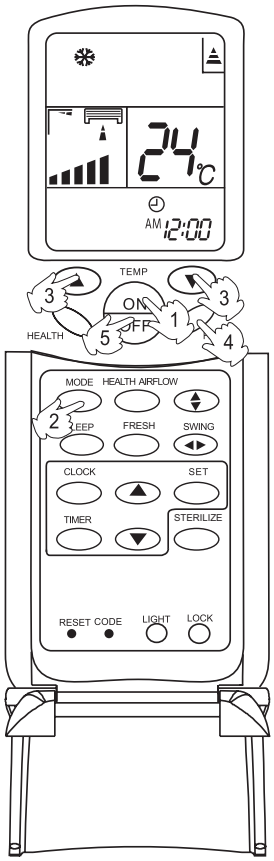

1. Unit start

Press ON/OFF on the remote controller, unit starts.

2.Select operation mode

Press MODE button. For each press, operation mode changes as follows:

Remote controller:

Then Select COOL operation

3.Select temp.setting

Press TEMP. button

△ Every time the button is pressed, temp.setting increase 1°C,if kept depressed, it will increase rapidly

▽ Every time the button is pressed, temp.setting decrease 1°C,if kept depressed, it will decrease rapidly

Select a desired temperature.

4.Fan speed selection

Press FAN button. For each press, fan speed changes as follows:

Remote controller:

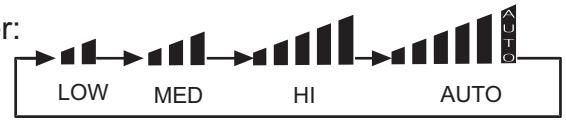

Air conditioner is running under displayed fan speed. When FAN is set to AUTO, the air conditioner automatically adjusts the fan speed according to room temperature.

5.Unit stop

Press ON/OFF button, the unit stops.

Все каталоги и инструкции здесь: https://splitsystema48.ru/instrukcii-po-ekspluatacii-kondicionerov.html

Operation

Dry Operation

24°C

Remote controller

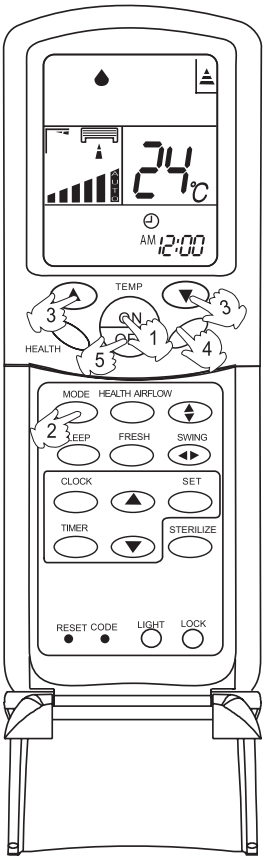

1. Unit start

Press ON/OFF on the remote controller, unit starts.

2.Select operation mode

Press MODE button. For each press, operation mode changes as follows:

Remote controller:

Then Select DRY operation

3.Select temp.setting

Press TEMP. button

Every time the button is pressed, temp.setting increase 1°C,if kept depressed, it will increase rapidly

▽ Every time the button is pressed, temp.setting decrease 1°C,if kept depressed, it will decrease rapidly

Select a desired temperature.

4.Fan speed selection

Press FAN button. For each press, fan speed changes as follows:

Remote controller:

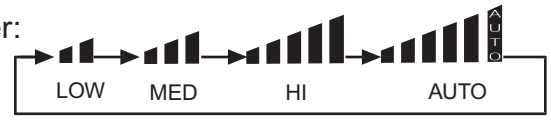

Air conditioner is running under displayed fan speed. In DRY mode, when room temperature becomes lower than temp.setting+2°C,unit will run intermittently at LOW speed regardless of FAN setting.

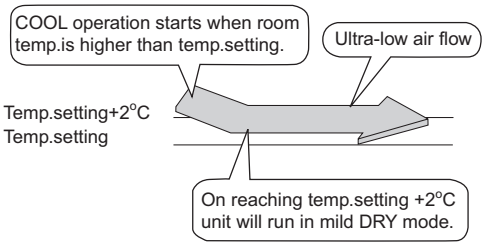

5.Unit stop

Press ON/OFF button, the unit stops.

Все каталоги и инструкции здесь: https://splitsystema48.ru/instrukcii-po-ekspluatacii-kondicionerov.html

Operation

Fan Operation

24℃

Remote controller

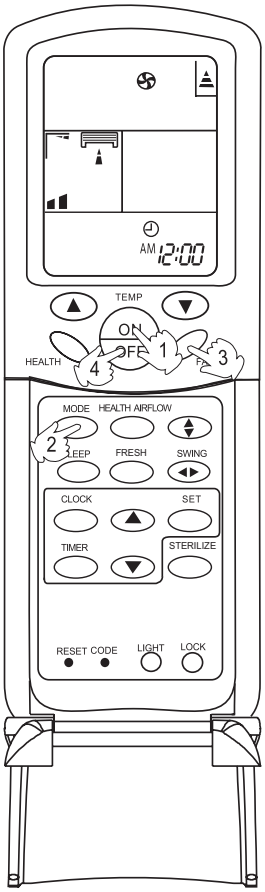

1. Unit start

Press ON/OFF on the remote controller, unit starts.

2.Select operation mode

Press MODE button. For each press, operation mode changes as follows:

Remote controller:

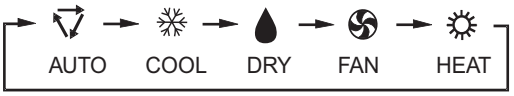

Then Select FAN operation

3.Fan speed selection

Press FAN button. For each press, fan speed changes as follows:

Remote controller:

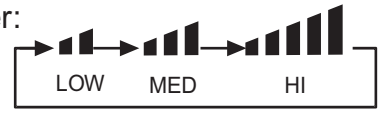

4.Unit stop

Press ON/OFF button, the unit stops.

About FAN operation

In FAN operation mode, the unit will not operate in COOL or HEAT mode but only in FAN mode ,AUTO is not available in FAN mode.And temp.setting is disabled. In FAN mode,SLEEP operation is not available.

Все каталоги и инструкции здесь: https://splitsystema48.ru/instrukcii-po-ekspluatacii-kondicionerov.html

Operation

Heat Operation

Remote controller

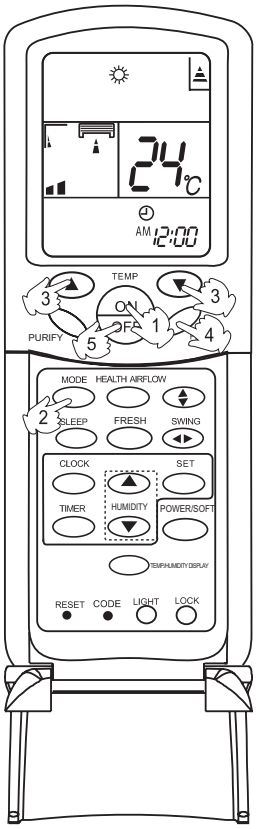

1. Unit start

Press ON/OFF on the remote controller, unit starts.

2.Select operation mode

Press MODE button. For each press, operation mode changes as follows:

Remote controller:

Then Select HEAT operation

3.Select temp.setting

Press TEMP. button

△ Every time the button is pressed, temp.setting increase 1°C,if kept depressed, it will increase rapidly

▽ Every time the button is pressed, temp.setting decrease 1°C,if kept depressed, it will decrease rapidly

Select a desired temperature.

4.Fan speed selection

Press FAN button. For each press, fan speed changes as follows:

Remote controller:

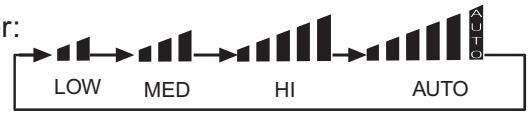

Air conditioner is running under displayed fan speed

IN HEAT mode, warm air will blow out after a short period of the time due to cold-draft prevention function.

When FAN is set to AUTO, the air conditioner automatically adjusts the fan speed according to room temperature.

5.Unit stop

Press ON/OFF button, the unit stops.

Все каталоги и инструкции здесь: https://splitsystema48.ru/instrukcii-po-ekspluatacii-kondicionerov.html

Operation

Air Flow Direction Adjustment

1.Status display of air sending

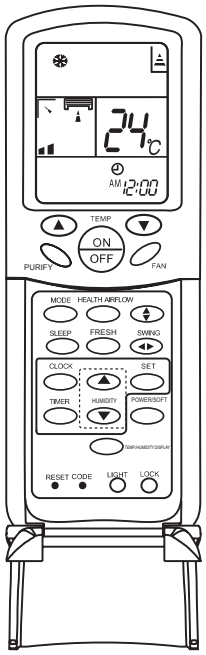

Vertical flap

Pos.1

Pos.2

Pos.3

Pos.4

Pos.5

Pos.6 (Auto swing)

Horizontal louvers

Pos.1

Pos.2

Pos.3

Pos.4

Pos.5

Pos.6

Pos.7

Pos.8

2.Up and down air flow direction

For each press of button, air flow direction on remote controller displays as follows according to different operation modes:

COOL/DRY/FAN:
remote controller: → Pos.1 → Pos.2 → Pos.3 → Pos.4 → Pos.6

HEAT:
remote controller: → Pos.5 → Pos.4 → Pos.3 → Pos.2 → Pos.1 → Pos.6

AUTO:
remote controller: → Pos.1 → Pos.2 → Pos.3 → Pos.4 → Pos.5 → Pos.6

The vertical flap will swing according to the above positions

3.Left and right air flow direction

For each press of button, remote controller displays as follows :

remote controller:

→ Pos.1 → Pos.2 → Pos.3 → Pos.4 → Pos.5 → Pos.6 → Pos.7 → Pos.8

The horizontal louvers will swing according to the above positions.

Note:When restart after remote turning off, the remote controller will automatically memorize the previous set swing position.

Все каталоги и инструкции здесь: https://splitsystema48.ru/instrukcii-po-ekspluatacii-kondicionerov.html

Operation

Sleep Operation

Display board

Before going to bed, you can simply press the SLEEP button and unit will operate in SLEEP mode and bring you a sound sleep.
Use of SLEEP function
After the unit starts, set the operation status, then press SLEEP button before which the clock must be adjusted and time being set.
Operation Mode
1. In COOL,DRY mode
1 hours after SLEEP mode starts, temp. will become 1°C higher than temp. setting. After another 1 hours, temp. rises by 1°C further. The unit will run for further 6 hours then stops. Temp. is higher than temp. setting so that room temperature won't be too low for your sleep.

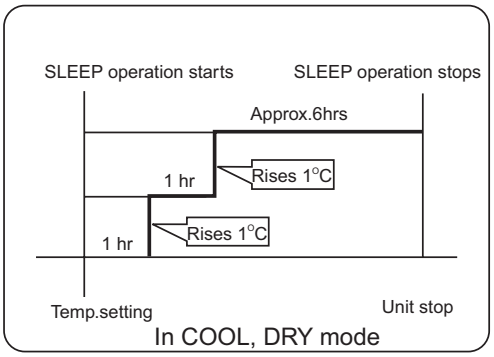

In COOL, DRY mode

Remote Controller

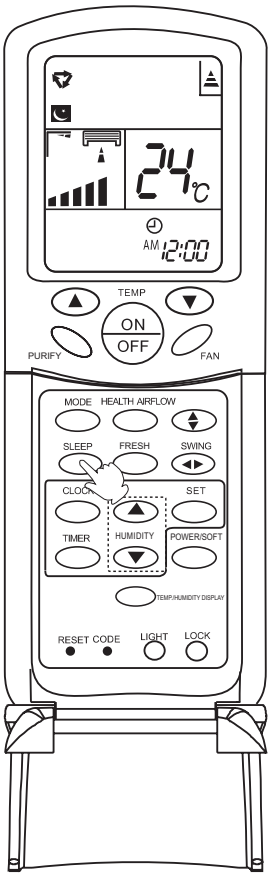

2. In AUTO mode
The unit operates in corresponding sleep mode adapted to the automatically selected operation mode.
3. In FAN mode
It has no SLEEP function.
4.Set the wind speed change when sleeping
If the wind speed is high or middle before setting for the sleep, set for lowing the wind speed after sleeping.
If it is low wind, no change.
5.Note to the power failure resume:
press the sleep button ten times in five seconds and enter this function after hearing four sounds. And press the sleep button ten times within five seconds and leave this function after hearing two sounds.

NOTE: With the power failure resume, when setting the TIMER ON, TIMER OFF and TIMER ON/OFF, it's memorized as shutdown status when resuming after power out.

Все каталоги и инструкции здесь: https://splitsystema48.ru/instrukcii-po-ekspluatacii-kondicionerov.html

Operation

Timer On/Off Operation

Remote Controller

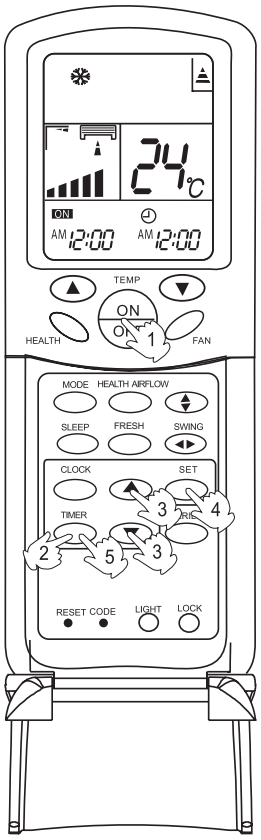

Set clock correctly before starting TIMER operation.

1. After unit starts, select your desired operation mode
   Operation mode will be displayed on LCD.
2. Timer mode selection
   Press TIMER button to change TIMER mode. Every time the button is pressed, display changes as follows:
   Remote controller:

Then select your desired TIMER mode (TIMER ON or TIMER OFF). " ON "or " OFF "will flash.

3.Time setting

Press HOUR △/ ▽ button.

△ Every time the button is pressed, time setting increases 1 min, if kept depressed, it will increase rapidly.

▽ Every time the button is pressed, time setting decreases 1 min, if kept depressed, it will decrease rapidly.
It can be adjusted within 24 hours.

4.Confirming your setting

After setting correct time, press SET button to confirm " ON "or" OFF "on the remote controller stops flashing.
Time displayed: Unit starts or stops at x hour x min. (TIMER ON or TIMER OFF).

5.Cancel TIMER mode

Just press TIMER button several times until TIMER mode disappears.

Hints:
After replacing batteries or a power failure happens, time setting should be reset.
Remote controller possesses memory function, when use TIMER mode next time, just press SET button after mode selecting if time setting is the same as previous one.

Все каталоги и инструкции здесь: https://splitsystema48.ru/instrukcii-po-ekspluatacii-kondicionerov.html

Operation

Timer On-Off Operation

Remote Controller

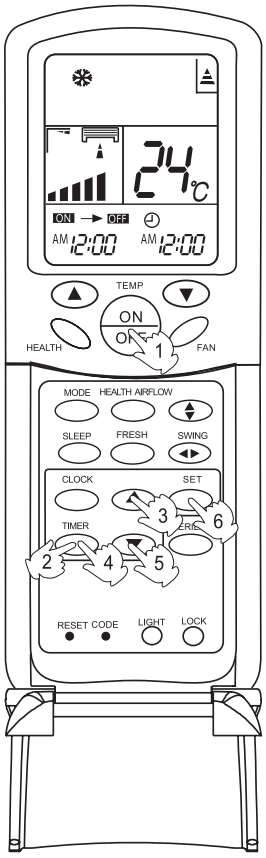

Set clock correctly before starting TIMER operation.

1. After unit starts, select your desired operation mode
   Operation mode will be displayed on LCD.
2. Timer mode selection
   Press TIMER button to change TIMER mode. Every time the button is pressed, display changes as follows:
   Remote controller:

   Then select your desired TIMER mode (TIMER ON - OFF).
   " ON "will flash.
3. Time setting
   Press HOUR △/ ▽ button.
   △ Every time the button is pressed, time setting increases 1 min, if kept depressed, it will increase rapidly.
   ▽ Every time the button is pressed, time setting decreases 1 min, if kept depressed, it will decrease rapidly.
   It can be adjusted within 24 hours.
4. Timer confirming for TIMER ON
   After setting correct time, press TIMER button to confirm
   " ON " on the remote controller stops flashing.
   " OFF " starts flashing.
   Time displayed: Unit starts or stops at x hour x min.
5. Time setting for TIMER OFF
   Just press HOUR button ,follow the same procedure in "Time setting for TIMER ON"
6. Time confirming for TIMER OFF
   After time setting,press SET button to confirm.
   " OFF " on the remote controller stops blinking.
   Time displayed:Unit stops at x hour x min.

To cancel TIMER mode
Just press TIMER button several times until TIMER mode disappears.
According to the Time setting sequence of TIMER ON or TIMER OFF, either Start-Stop or Stop-Start can be achieved.

Все каталоги и инструкции здесь: https://splitsystema48.ru/instrukcii-po-ekspluatacii-kondicionerov.html

Operation

POWER/SOFT Operation

Remote controller

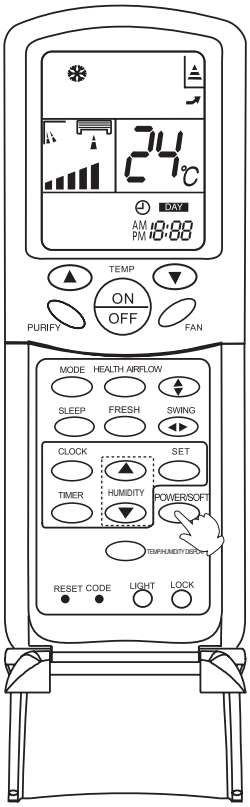

POWER Operation

When you need rapid cooling, you can use this funciton.

Selecting of POWER operation

Press POWER/SOFT button. Every time the button is pressed,display changes as follows:

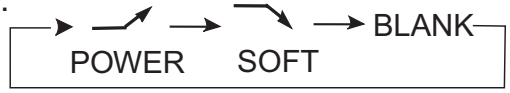

Stop the display at" ".

In POWER operation status:

In COOL mode, fan speed automatically runs in HI mode for 15 min then returns to original status setting.

To cancel POWER operation

Press POWER/SOFT button twice ,POWER/SOFT disappears.

SOFT Operation

You can use this function when silence is needed for rest or reading.

Selecting of SOFT operation

Press POWER/SOFT button. Every time the button is pressed,display changes as follows:

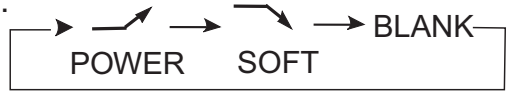

Stop the display at " ".

In SOFT operation mode, fan speed automatically takes"LOW"

To cancel SOFT operation

Press POWER/SOFT button twice ,POWER/SOFT disappears.

Hints:

During POWER operation, in rapid COOL mode, the room will show inhomogeneous temperature distribution.

Long period SOFT operation will cause effect of not too cool.

Haier Все каталоги и инструкции здесь: https://splitsystema48.ru/instrukcii-po-ekspluatacii-kondicionerov.html mestic Air Conditioner

Operation

Health airflow Operation

Remote controller

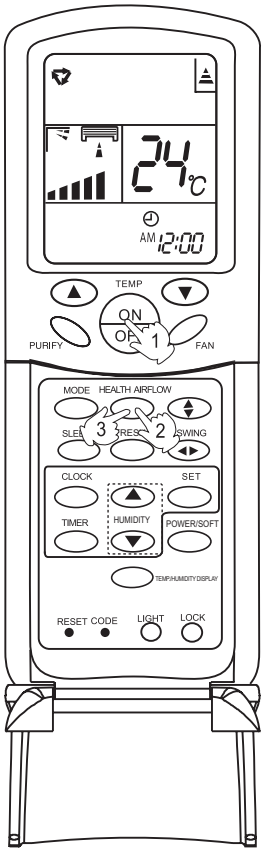

1.Press ON/OFF to starting

The liquid crystal will display the working state of last time (Except timer, sleeping, power/soft and health airflow). Setting the comfort work conditions.

2.The setting of health airflow function

1).Press the button of health airflow, appears on the display. The nether inlet and outlet grills of the air conditioner are closed and the airflow is blown horizontally from the above inlet and outlet grills. Avoid the strong airflow blows direct to the body.

2).Press the button of health airflow again, appears on the display. The above inlet and outlet grills of the air conditioner are closed and the airflow is blown vertically from the nether inlet and outlet grills. Avoid the strong airflow blows direct to the body.

3.The cancel of the health airflow function

Press the button of health airflow again, both the inlet and outlet grills of the air conditioner are opened, and the unit goes on working under the condition before the setting of health airflow function.

After stopping, the outlet grille will close automatically.

Notice: Cannot pull direct the outlet grille by hand. Otherwise, the grille will run incorrectly. If the grille is not run correctly, stop for a minute and then start, adjusting by remote controller.

Note:

1 .After setting the health airflow function, the position of inlet and outlet grills is fixed.

2.In heating, it is better to select the mode.

3.In cooling, it is better to select the mode.

4.In cooling and dry, using the air conditioner for a long time under the high air humidity, a phenomenon falling drips of water occurs at the outlet grille .

5.Select the appropriate fan direction according to the actual conditions.

Все каталоги и инструкции здесь: https://splitsystema48.ru/instrukcii-po-ekspluatacii-kondicionerov.html

Operation

Emergency and Test Operation

Emergency operation:

- Use this operation only when the remote controller is defective or lost.
- When the emergency operation switch is pressed,the" Pi "sound is heard once, which means the start of this operation.
- In this operation, the system automatically selects the operation modes, cooling or heating, according to the room temperature.

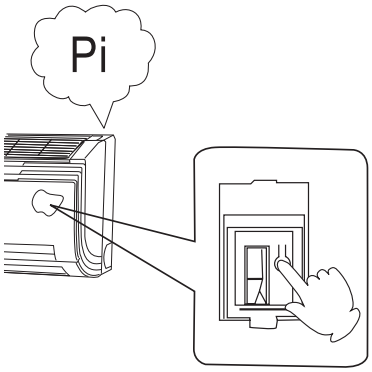

Temperature	Operation mode	Designated temperature	Timer mode	Air flow
ABOVE 23°C	COOLING	26°C	NO	AUTOMATIC
BELOW 23°C	HEATING	23°C	NO	AUTOMATIC

- It is not possible to operate in dry mode.

Test operation:

Test operation switch is the same as emergency switch.

- Use this switch in the test operation when the room temperature is below 16°C, do not use it in the normal operation.
- Continue to press the test operation switch for more than 5 seconds. After you hear the "Pi" sound twice, release your finger from the switch: the cooling operation starts with the air flow speed "Hi".
- After 30 minutes, test operation ends automatically.

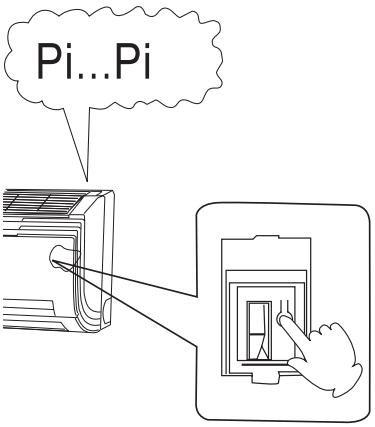

Removal of the restriction of emergency or test operation

Press the emergency operation switch once more, or manipulate through the remote controller; the "Pi" sound, the emergency or test operation is terminated.

Все каталоги и инструкции здесь: https://splitsystema48.ru/instrukcii-po-ekspluatacii-kondicionerov.html

Maintenance

For Smart Use of The Air Conditioner

Setting of proper room temperature

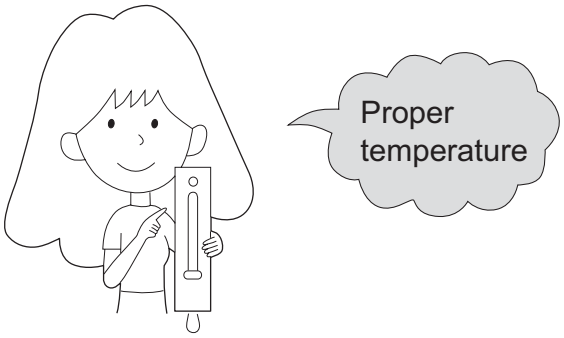

Do not block the air inlet or outlet

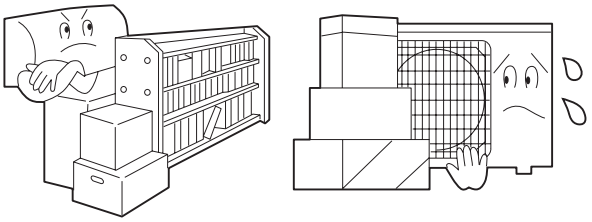

Close doors and windows during operation

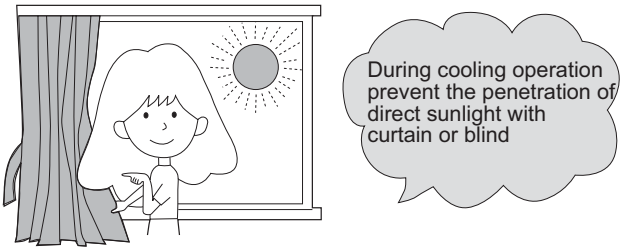

Use the timer effectively

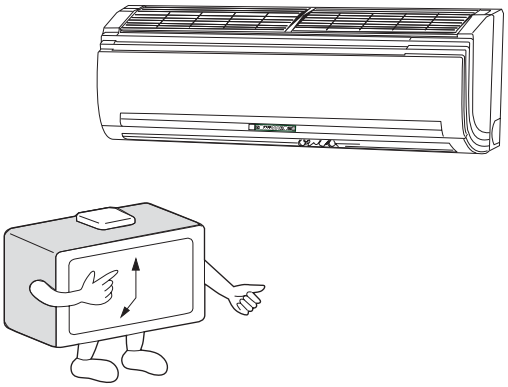

If the unit is not to be used for a long time, turn off the power supply main switch.

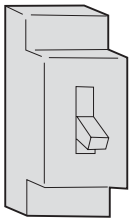

Use the louvers effectively

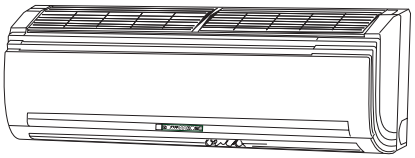

Все каталоги и инструкции здесь: https://splitsystema48.ru/instrukcii-po-ekspluatacii-kondicionerov.html

Maintenance

For Smart Use of The Air Conditioner

⚠ WARNING

Before maintenance,be sure to turn off the system and the circuit breaker.

Remote Controller

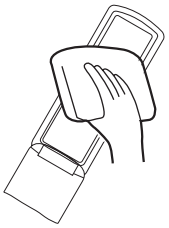

Do not use water, wipe the controller with a dry cloth.Do not use glass cleaner or chemical cloth.

Indoor Body

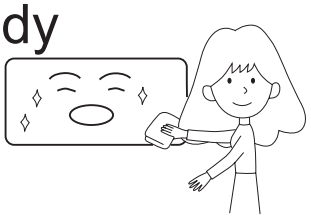

Wipe the air conditioner by using a soft and dry cloth.For serious stains,use a neutral detergent diluted with water.Wring the water out of the cloth before wiping.then wipe off the detergent completely.

Do not use the following for cleaning

Gasoline,benzine, thinner or cleanser may damage the coating of the unit.

Hot water over 40°C(104°F) may cause discoloring or deformation.

Air Filter cleaning

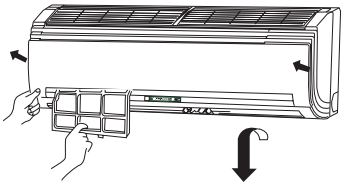

1 Open the inlet grille by pulling it upward.

2 Remove the filter.

Push up the filter's center tab slightly until it is released from the stopper, and remove the filter downward.

3 Clean the filter.

Use a vacuum cleaner to remove dust, or wash the filter with water.After washing, dry the filter completely in the shade.

4 Attach the filter.

Attach the filter correctly so that the "FRONT" indication is facing to the front.Make sure that the filter is completely fixed behind the stopper.If the right and left filters are not attached correctly, that may cause defects.

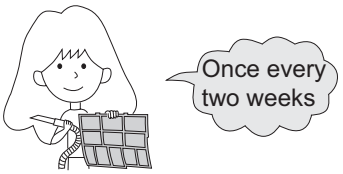

5 Close the inlet grille.

Все каталоги и инструкции здесь: https://splitsystema48.ru/instrukcii-po-ekspluatacii-kondicionerov.html

Maintenance

Replancement of Air Purifying Filter

1.Open the Inlet Grille

Open the inlet grille by pushing each ends of the inlet grille upward.(use thumbs to push up)

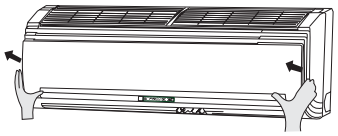

2.Detach the standard air filter

Slide the knob slightly upward to release the filter, then withdraw it.

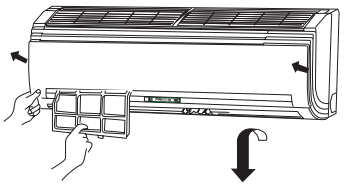

Detach old Air Purifying Filter

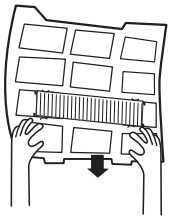

3.Attach new Air Purifying Filter

Put air purifying filter appliances into the right and left filter frames.

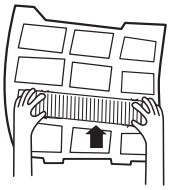

4.Attach the standard air filter

(Necessary installation)

5.Close the Inlet Grille

Close the Grille surely

The green aspect of the bacteria-killing medium air purifying filter will face outside, the white aspect will face to the machine.

Note: the bacteria-killing mediums placed on the left side. the multi-lights touching intermediary is placed on the right side.

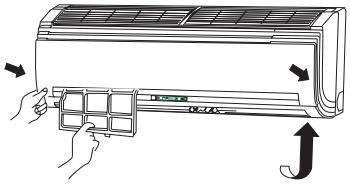

Common sense:

- The air purifying filter of the bacteria-killing medium and the multi-lights touching intermediary is effective for a long time and don't need to be changed (UV light emitted by the UV light device of the indoor unit catalytically activates the nano TiO_2 on the multi-lights touching intermediary, and the degerming effect is highly efficient and lasting. multi-lights touching intermediary don't need to be exposed to the sunlight.)
  But in the use, please note to clean the filter frequently (take off the back suction cleaner or lightly pat it) to avoid the operating effect is lowered due to the dust covering the filter. Multi-lights touching intermediary and bacteria-killing medium filter is strictly prohibited from being cleaned by water.
- The the bacteria-killing medium filter not in use should be stored in shade, cool and dry place. Please don't expose it to the sunlight for a long time otherwise the degerming performance will drop.

Все каталоги и инструкции здесь: https://splitsystema48.ru/instrukcii-po-ekspluatacii-kondicionerov.html

Maintenance

To Keep Your Air conditioner in Good Condition after Season.

1 Operate in cooling mode for 2-3 hours.

To prevent breeding mold or bad smell, be sure to operate at the designated temperature or 30°C,cooling mode and High speed fan mode for 2-3 hours.

2 Put off the power supply cord.

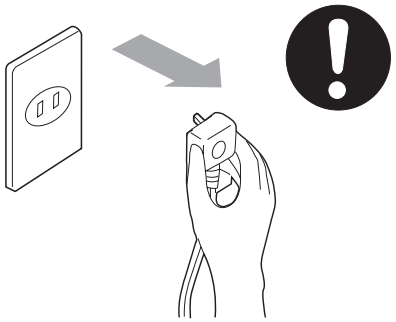

3 Cleaning the body.

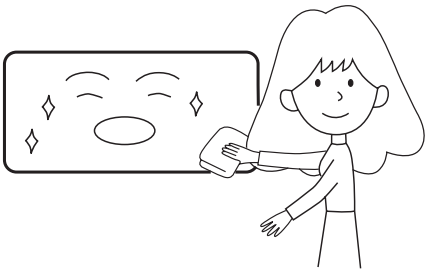

4 Take out the batteries from the wireless remote controller.

Все каталоги и инструкции здесь: https://splitsystema48.ru/instrukcii-po-ekspluatacii-kondicionerov.html

Maintenance

Before Setting in High season

1 Cleaning the standard air filter.

Operation without filter may cause troubles.Be sure to attach both right and left filters prior to the operation. Each of them are of different shapes.

2 Connecting the earthing cable.

⚠ Caution

- Incomplete earthing may cause an electric shock.

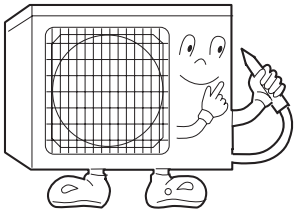

EARTHING

3 Do not block the air inlet or outlet.

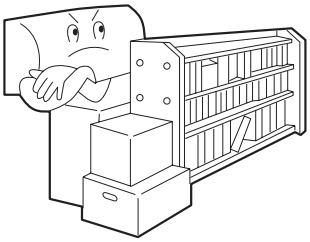

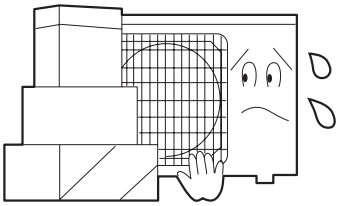

4 Plug-in

⚠ Caution

- After brush away dust at the plug, insert the plug of the power supply cord into the outlet completely.In case of suing exclusive circuit breaker,switch on the circuit breaker.

NO WET HAND

Все каталоги и инструкции здесь: https://splitsystema48.ru/instrukcii-po-ekspluatacii-kondicionerov.html

Trouble shooting

Before asking for service, check the following first.

	Phenomenon	Cause or check points
Normal Performance inspection	The system does not restart immediately.	• When unit is stopped, it won't restart immediately until 3 minutes have elapsed to protect the system. • When the electric plug is pulled out and reinserted, the protection circuit will work for 3 minutes to protect the air conditioner.
	Noise is heard:	• During unit operation or at stop, a swishing or gurgling noise may be heard. At first 2-3 minutes after unit start, this noise is more noticeable. (This noise is generated by refrigerant flowing in the system.) • During unit operation, a cracking noise may be heard. This noise is generated by the casing expanding or shrinking because of temperature changes. • Should there be a big noise from air flow in unit operation, air filter may be too dirty.
	Smells are generated.	• This is because the system circulates smells from the interior air such as the smell of furniture, cigarettes.
	Mist or steam are blown out.	• During COOL or DRY operation, indoor unit may blow out mist. This is due to the sudden cooling of indoor air.
Multiple check	Does not work at all.	• Is power plug inserted? • Is there a power failure? • Is fuse blown out?
	Poor cooling	• Is the air filter dirty? Normally it should be cleaned every 15 days. • Are there any obstacles before inlet and outlet? • Is temperature set correctly? • Are there some doors or windows left open? • Is there any direct sunlight through the window during the cooling operation?(Use curtain) • Are there too much heat sources or too many people in the room during cooling operation?

Haier Все каталоги и инструкции здесь: https://splitsystema48.ru/instrukcii-po-ekspluatacii-kondicionerov.html mestic Air Conditioner

7.Codes and Description

7-1.Problem Symptoms and Measures

Symptom	Check Item	Details of Measure	
None of the units operates	Check the power supply.	Check to make sure that the rated voltage is supplied.	
	Check the indoor PCB	Check to make sure that the indoor PCB is broken	
Equipment operates but does not cool, or does not heat (only for heat pump)	Diagnosis by service port pressure and operating current.	Check for insufficient gas.	
Large operating noise and vibrations	Check the installation condition.	Check to make sure that the required spaces for installation (specified in the Technical Guide, etc.) are provided.	

	Code indication	Description	Reference Page
	indoor		
Indoor Malfunction	E1	Room temperature sensor failure	52
	E2	Heat-exchange sensor failure	52
	E4	Indoor EEPROM error/Humidity sensor malfunction	54
	E14	Indoor fan motor malfunction	54

7.2Trouble Shooting

Thermistor or Related Abnormality (indoor unit)

Indoor Display **E1 E2**

Method of Malfunction Detection: the temperatures detected by the thermistors are used to determine thermistor errors

Malfunction Decision Conditions: when the thermistor input is more than 4.92V or less than 0.08V during compressor operation.

* Note: The values vary slightly in some models

Supposed Causes:
- Faulty connector connection
- Faulty thermistor
- Faulty PCB

Troubleshooting * Caution Be sure to turn off power switch before connect or disconnect connector, or parts damage may be occurred.

E1: Room temperature sensor failure CN8

E2: Heat-exchange sensor failure CN8

Все каталоги и инструкции здесь: https://splitsystema48.ru/instrukcii-po-ekspluatacii-kondicionerov.html

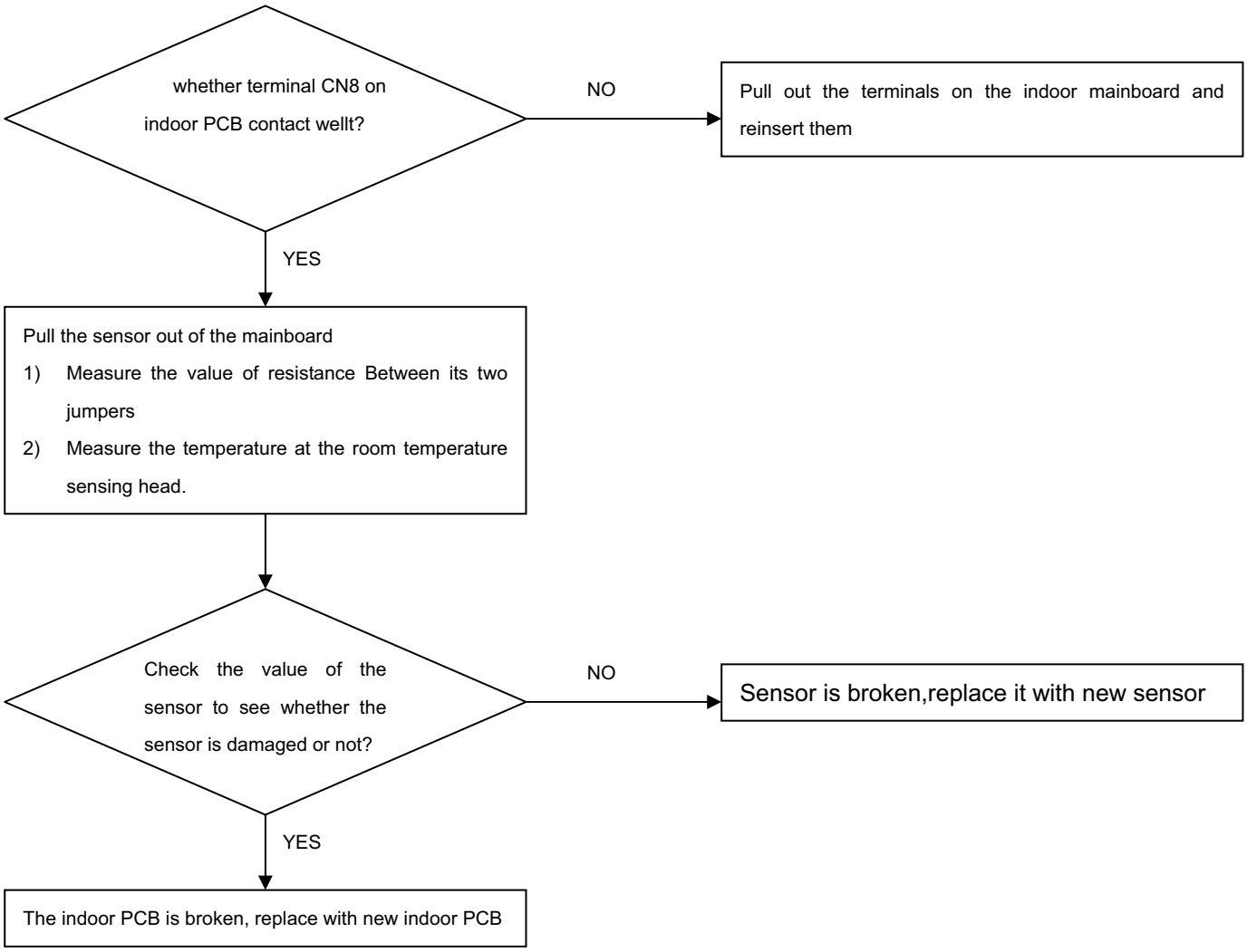

Все каталоги и инструкции здесь: https://splitsystema48.ru/instrukcii-po-ekspluatacii-kondicionerov.html

The EEPROM Abnormality (indoor unit)

Indoor Display	E4
Method of Malfunction Detection	the Data detected by the EEPROM are used to determine MCU
Malfunction Decision Conditions	when the Data of EEPROM is error or the EEPROM is damaged
Supposed Causes	■ Faulty EEPROM data ■ Faulty EEPROM ■ Faulty PCB
Troubleshooting	* Caution Be sure to turn off power switch before connect or disconnect connector, or parts damage may be occurred.

Resolvent : **Replace the PCB of indoor unit**

Fan Motor or Related Abnormality

Indoor Display	E14
Method of Malfunction Detection	The rotation speed detected by the Hall IC during fan motor operation is used to determine abnormal fan motor operation
Malfunction Decision Conditions	when the detected rotation feedback singal don't receiced in 2 minutes
Supposed Causes	■ Operation halt due to breaking of wire inside the fan motor . ■ Operation halt due to breaking of the fan motor lead wires ■ Dedection error due to faulty indoor unit PCB

Все каталоги и инструкции здесь: https://splitsystema48.ru/instrukcii-po-ekspluatacii-kondicionerov.html

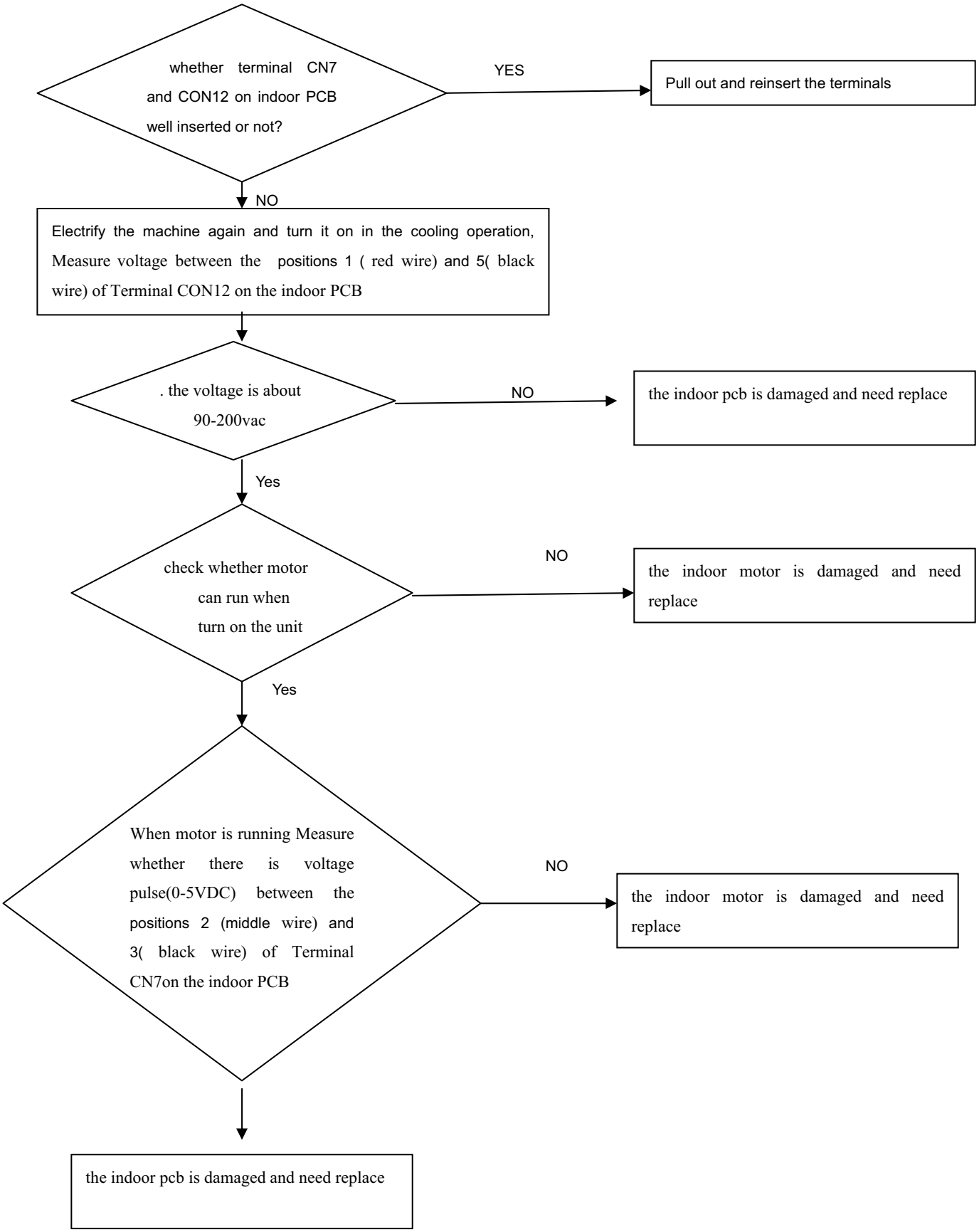

Все каталоги и инструкции здесь: https://splitsystema48.ru/instrukcii-po-ekspluatacii-kondicionerov.html

8 Installation

- Read this manual before installation
- Explain sufficiently the operating means to the user according to this manual.

Necessary Tools for Installation

1.Driver
2.Hacksaw
3.Hole core drill
4.Spanner(17,19 and 26mm)
5.Torque wrench(17mm,22mm,26mm)
6.Pipe cutter
7.Flaring tool
8.Knife
9.Nipper
10.Gas leakage detector or soap-and-water solution
11.Measuring tape
12.Reamer

Drawing for the installation of indoor and outdoor units

Accessory parts

No.	Accessory parts	Number of articles
①	Remote controller	1
②	R-03 dry battery	2
③	Mounting plate	1
④	Drain hose	1
⑤	ϕ4X50 Steel nail, cement	6
⑥	ϕ4X25 Screw / Plastic cap	4
⑦	Screw	6
⑧	Drain-elbow	1
⑨	Cover	1
⑩	Cushion	4
⑪	Connecting cable	1
⑫	Change for fresh air box	1
⑬	Change for fresh air tube(suit)	1
⑭	Outlet joint	2
⑮	Outlet joint	1

Optional parts for piping

Mark	Parts name
Ⓐ	Non-adhesive tape
Ⓑ	Adhesive tape
Ⓒ	Saddle(L.S) with screws
Ⓓ	Connecting electric cable for indoor and outdoor
Ⓔ	Drain hose
Ⓕ	Heating insulating material
Ⓖ	Piping hole cover

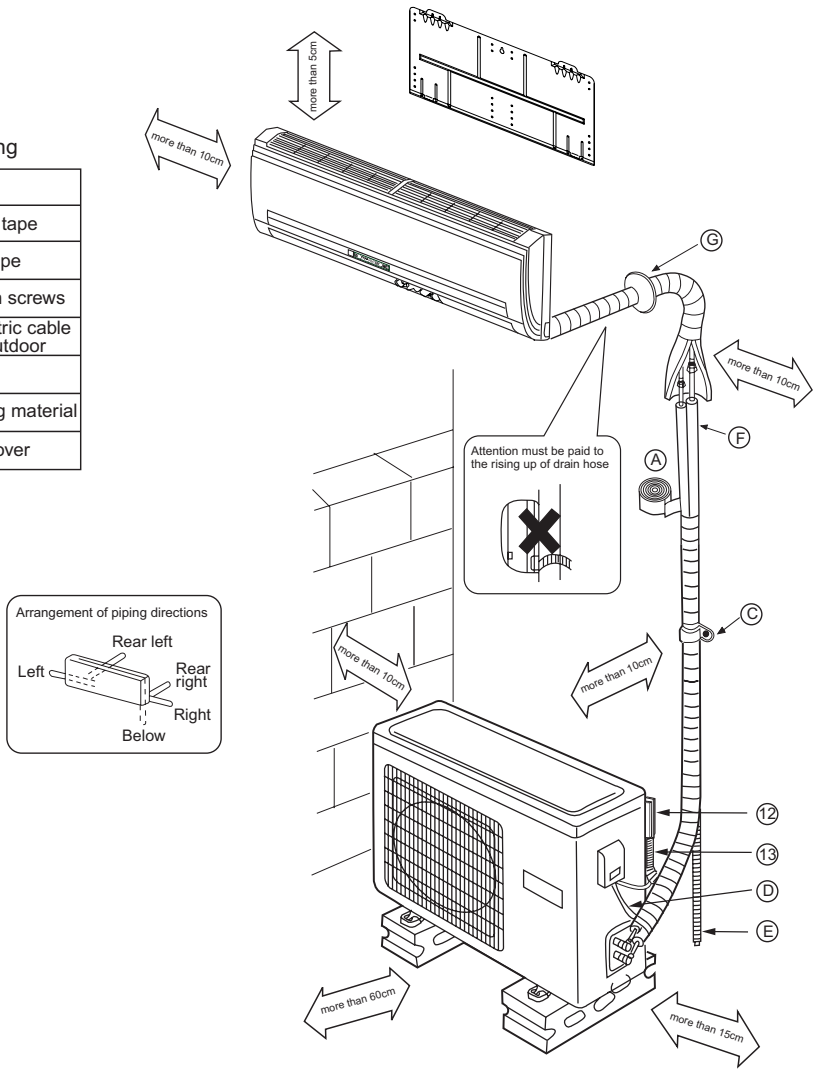

Note:1.Cooling only units don't have Drain-elbow
2. ⑭ is only for the models of 18,22.
3.The models ZF don't have fresh function and accessory parts related with freshing.

※ The marks from Ⓐto Ⓖin the figure are the parts numbers.

※ The distance between the indoor unit and the floor should be
more than 2m.

Все каталоги и инструкции здесь: https://splitsystema48.ru/instrukcii-po-ekspluatacii-kondicionerov.html

HSU-09C03/VA(ZXF) HSU-12C03/VA(ZXF)
HSU-09H03/VA(ZXF) HSU-12H03/VA(ZXF)

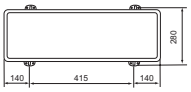

Floor fixing dimensions of the outdoor unit (Unit:mm)

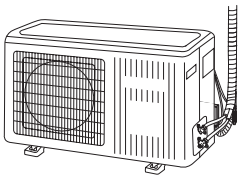

HSU-18C03/V(ZXF) HSU-12H03/VB(ZXF)
HSU-18H03/V(ZXF) HSU-12H03/V(ZXF)

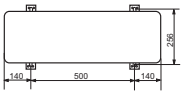

Floor fixing dimensions of the outdoor unit (Unit:mm)

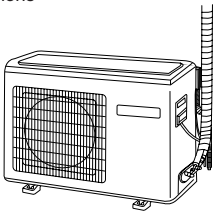

HSU-22C03/V(ZXF) HSU-22C03/V(ZF) HSU-22H03/V(ZF)
HSU-22H03/V(ZXF) HSU-24C03/V(ZXF)
HSU-24C03/V(ZF) HSU-24H03/V(ZF) HSU-24H03/V(ZXF)
HSU-24HK0307
HSU-24HD0307

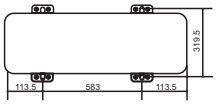

Floor fixing dimensions of the outdoor unit (Unit:mm)

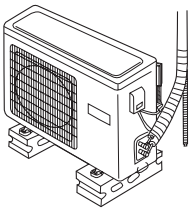

Fixing of outdoor unit

- Fix the unit to concrete or block with bolts(ϕ10mm) and nuts firmly and horizontally.
- When fitting the unit to wall surface, roof or rooftop, fix a supporter surely with nails or wires in consideration of earthquake and strong wind.
- If vibration may affect the house, fix the unit by attaching a vibration-proof mat.

Selection of Installation Place

Indoor Unit

- Place, robust not causing vibration, where the body can be supported sufficiently.
- Place, not affected by heat or steam generated in the vicinity, where inlet and outlet of the unit are not disturbed.
- Place, possible to drain easily, where piping can be connected with the outdoor unit.
- Place, where cold air can be spread in a room entirely.
- Place, nearby a power receptacle, with enough space around. (Refer to drawings).
- Place where the distance of more than lm from televisions, radios, wireless apparatuses and fluorescent lamps can be left.
- In the case of fixing the remote controller on a wall, place where the indoor unit can receive signals when the fluorescent lamps in the room are lightened.

Outdoor Unit

- Place, which is less affected by rain or direct sunlight and is sufficiently ventilated.
- Place, possible to bear the unit, where vibration and noise are not increased.
- Place, where discharged wind and noise do not cause a nuisance to the neighbors.
- Place, where a distance marked ⇔ is available as illustrated in the above figure.

Power Source

- Before inserting power plug into receptacle, check the voltage without fail. The power source is the same as the corresponding name plate.
- Install an exclusive branch circuit of the power.
- A receptacle shall be set up in a distance where the power cable can be reached. Do not extend the cable by cutting it.

Selection of pipe

- To this unit, both liquid and gas pipes shall be insulated as they become low temperature in operation.
- Use optional parts for piping set or pipes covered with equivalent insulation material.

	For 09	For 12,18	For 22,24
Liquid pipe(ϕ)	6.35mm(1/4")	6.35mm(1/4")	9.52mm(3/8")
Gas pipe(ϕ)	9.52mm(3/8")	12.7mm(1/2")	15.88mm(5/8")

Все каталоги и инструкции здесь: https://splitsystema48.ru/instrukcii-po-ekspluatacii-kondicionerov.html

Indoor unit

1.Fitting of the Mounting Plate and Positioning of the wall Hole

When the mounting plate is first fixed

1. Carry out, based on the neighboring pillars or lintels, a proper leveling for the plate to be fixed against the wall, then temporarily fasten the plate with one steel nail.
2. Make sure once more the proper level of the plate, by hanging a thread with a weight from the central top of the plate, then fasten securely the plate with the attachment steel nail.
3. Find the wall hole location A using a measuring tape

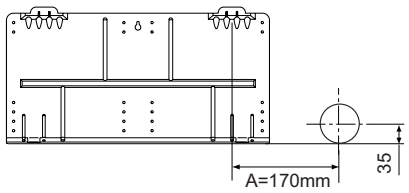

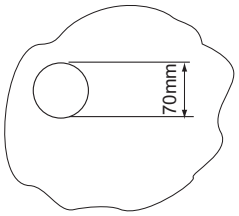

Fit the level line

When the mounting plate is fixed side bar and lintel

- Fix to side bar and lintel a mounting bar, Which is separately sold, and then fasten the plate to the fixed mounting bar.
- Refer to the previous article, " When the mounting plate is first fixed ", for the position of wall hole.

2.Making a Hole on the Wall and Fitting the Piping Hole Cover

- Make a hole of 66 mm in diameter, slightly descending to outside the wall.
- Install piping hole cover and seal it off with putty after installation

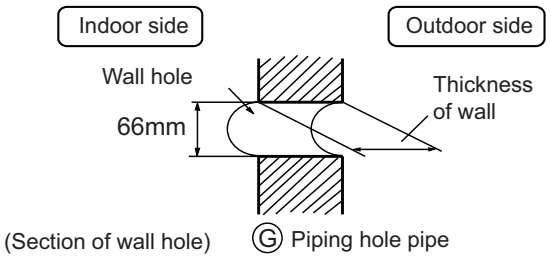

3.Installation of the Indoor Unit

Drawing of pipe

[Rear piping]

- Draw pipes and the drain hose, then fasten them with the adhesive tape

[Left • Left-rear piping]

- In case of left side piping, cut away, with a nipper, the lid for left piping.
- In case of left-rear piping, bend the pipes according to the piping direction to the mark of hole for left-rear piping which is marked on heat insulation materials.

Все каталоги и инструкции здесь: https://splitsystema48.ru/instrukcii-po-ekspluatacii-kondicionerov.html

Indoor unit

1. Insert the drain hose into the dent of heat insulation materials of indoor unit.
2. Insert the indoor/outdoor electric cable from backside of indoor unit, and pull it out on the front side, then connect them.
3. Coat the flaring seal face with refrigerant oil and connect pipes.
   Cover the connection part with heat insulation materials closely, and make sure fixing with adhesive tape

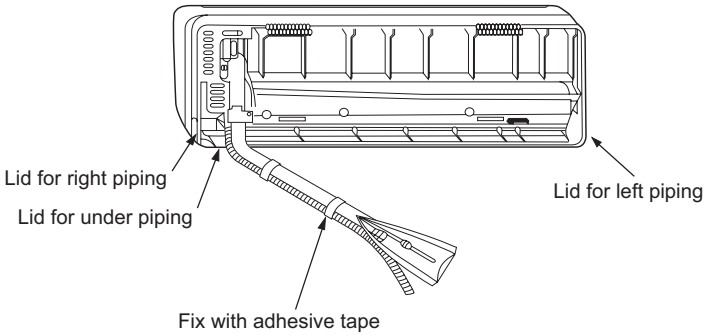

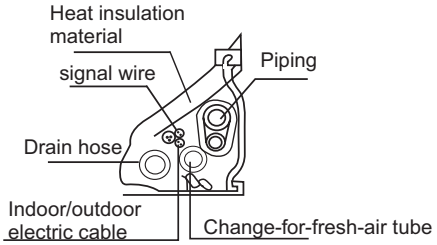

- Indoor/outdoor electric cable and drain hose must be bound with refrigerant piping by protecting tape.

[Other direction piping]

- Cut away, with a nipper, the lid for piping according to the piping direction and then bend the pipe according to the position of wall hole. When bending, be careful not to crash pipes.
- Connect beforehand the indoor/outdoor electric cable, and then pull out the connected to the heat insulation of connecting part specially.

Fixing the indoor unit body

- Hang surely the unit body onto the upper notches of the mounting plate. Move the body from side to side to verify its secure fixing.
- In order to fix the body onto the mounting plate,hold up the body aslant from the underside and then put it down perpendicularly.

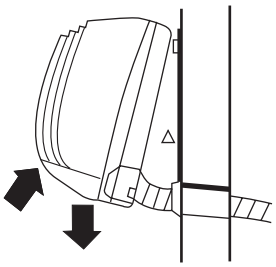

4.Connecting the indoor/outdoor Electric Cable

Removing the wiring cover

- Remove terminal cover at right bottom corner of indoor unit, then take off wiring cover by removing its screws.

When connecting the cable after installing the indoor unit

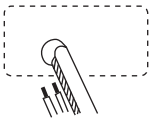

1. Insert from outside the room cable into left side of the wall hole, in which the pipe has already existed.
2. Pull out the cable on the front side, and connect the cable making a loop.

When connecting the cable before installing the indoor unit

- Insert the cable from the back side of the unit, then pull it out on the front side.
- Loosen the screws and insert the cable ends fully into terminal block, then tighten the screws.
- Pull the cable slightly to make sure the cables have been properly inserted and tightened.
- After the cable connection, never fail to fasten the connected cable with the wiring cover.

  Note: When connecting the cable, confirm the terminal number of indoor and outdoor units carefully. If wiring is not correct, proper operation can not be carried out and will cause defect.

Все каталоги и инструкции здесь: https://splitsystema48.ru/instrukcii-po-ekspluatacii-kondicionerov.html

Indoor unit

1. If the supply cord is damaged, it must be replaced by the manufacturer or its service agent or a similar qualified person. The type of connecting wire is H05RN-F or H07RN-F.
2. If the fuse on PC board is broken please change it with the type of T. 3.15A/250V.
3. The wiring method should be in line with the local wiring standard.
4. After installation, the power plug should be easily reached.

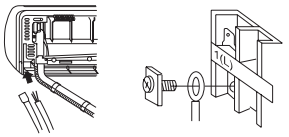

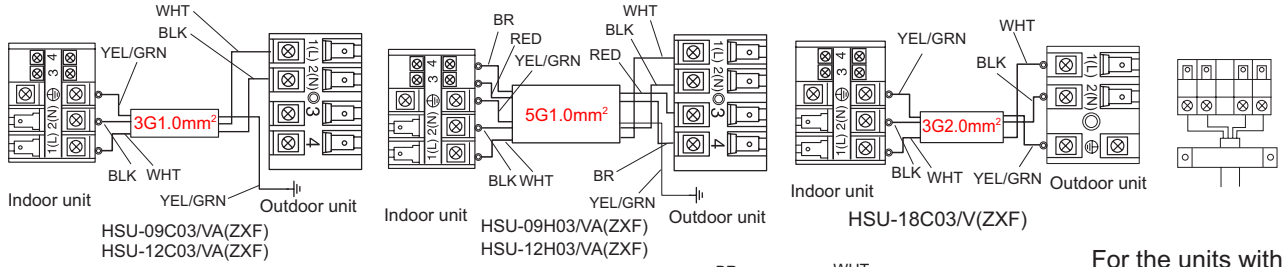

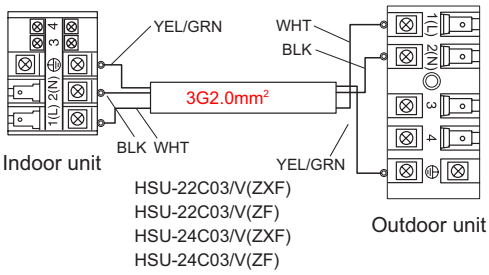

Power cable:
-mod 09-12-18:*3G1.5mm²
-mod 22-24:*3G2.5mm²

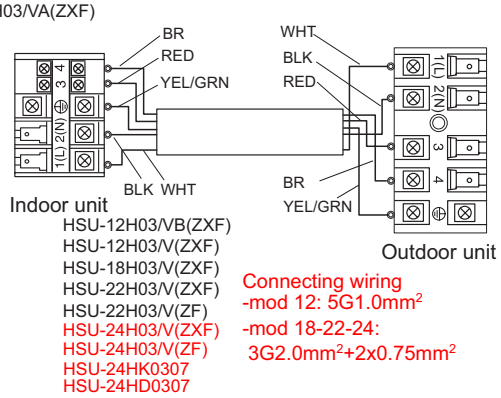

Connecting wiring
-mod 12: 5G1.0mm²
-mod 18-22-24:
3G2.0mm²+2x0.75mm²

For the units with fresh air function

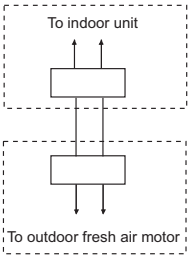

The connecting method of fresh air box signal wire

5.Installation instruction on the indoor part of the fresh air device

1.Two ways for the installation of indoor part, as illustrated:
Way One:(For all the models)
In the guard ring, connect outlet joint with the fresh air tube .
Way Two(Only for the models of 09,12):
Insert the joint of water collecting pan into the fresh air tube, then connect the other end of joint with mesh enclosure of water collecting pan.

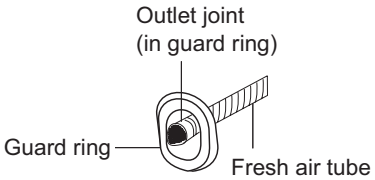

Installation way One

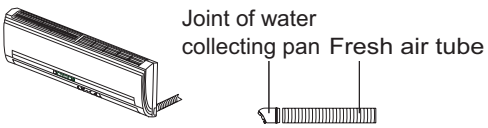

Installation way Two

2.Another way for the models of 18,22 ,24,as illustrated:
Way One (right direction): Take off the lid for right piping pipe,put the Outlet joint into the lid,then put the fresh air tube into the outlet jont.
Way Two (left direction): Take off the lid for leftt piping pipe,put the Outlet joint into the lid,then put the fresh air tube into the outlet jont.

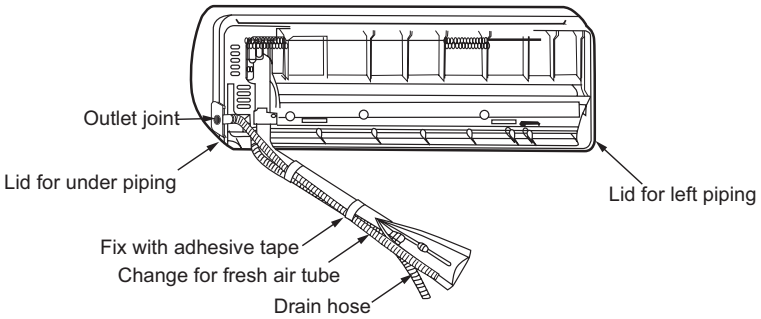

Все каталоги и инструкции здесь: https://splitsystema48.ru/instrukcii-po-ekspluatacii-kondicionerov.html

Outdoor unit

6.Easily-demount cleaning of indoor unit

1.Top inlet can be taken down

Open the inlet grille, press the claw of the clip on the unit,then take down the top inlet.(according to figure 1)

2.Vertical flap can be taken down

Overturn the vertical flap, press the claw of the clip ,then take down vertical flap.(according to figure 2)

3.Horizontal louvers can be taken down

After taking down vertical flap.Horizontal louvers are appeared,draw the middle louver,and take down the horizontal louvers . (according to figure 3)

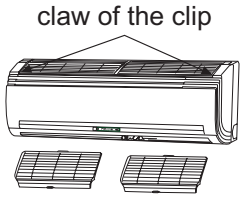

Figure 1

Figure 2

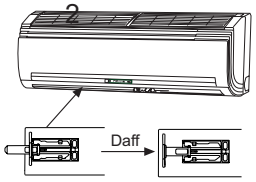

Figure 3

Outdoor unit

1.Installation of Outdoor Unit

Install according to Drawing for the installation of indoor and outdoor units

2.Connection of pipes

- To bend a pipe, give the roundness as large as possible not to crush the pipe ,and the bending radius should be 30 to 40 mm or longer.
- Connecting the pipe of gas side first makes working easier.
- The max vertical distance between the indoor unit and the outdoor unit is 5 m.

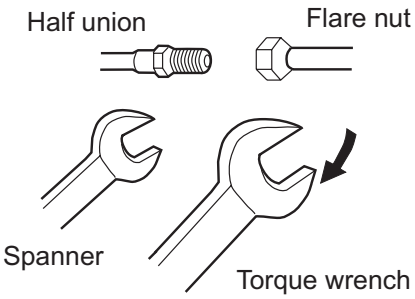

Forced fastening without careful centering may damage the threads and cause a leakage of gas.

Pipe Diameter (Φ)	Fastening torque
Liquid side 6.35mm(1/4")	18N.m
Gas side 9.52mm(3/8")	40N.m
Gas side 12.7mm(1/2")	50N.m
Gas side 15.88mm(5/8")	60N.m

3.Connection

- Use the same method on indoor unit. Loosen the screws on terminal block and insert the plugs fully into terminal block, then tighten the screws.
- Insert the cable according to terminal number in the same manner as the indoor unit.
- If wiring is not correct, proper operation can not be carried out and controller may be damaged.
- Fix the cable with a clamp.

4.Attaching Drain-Elbow

- If the drain-elbow is used, please attach it as figure. (Note: Only for heat pump unit.)

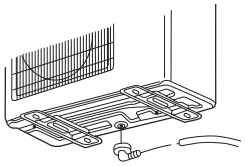

Все каталоги и инструкции здесь: https://splitsystema48.ru/instrukcii-po-ekspluatacii-kondicionerov.html

Outdoor unit

5.Installation instruction on the outdoor part of the fresh air device

1.Remove the four screws of fresh air box from the back cover.
2.Use six screws to fix fresh air box onto the designated position on the outdoor unit.
3.Remove two screws of the pipe junction of the fresh air box, then insert the flared departure of the change for fresh air tube into the pipe junction and then fix with the screws.
4.Use four screws to fix the fresh air box onto the back cover, as illustrated:

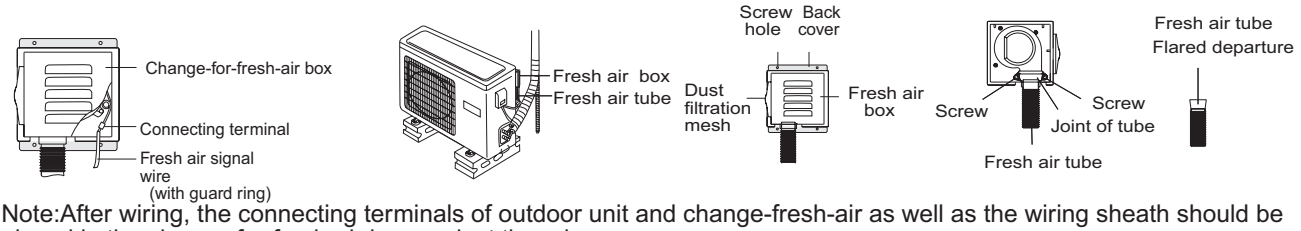

Note:After wiring, the connecting terminals of outdoor unit and change-fresh-air as well as the wiring sheath should be placed in the change-for-fresh-air box against the rain.

6.Purging Method:

Push the air out of the indoor unit and piping as followes:

(1) Remove the valve cap on 2-way valve in outdoor unit.
(2) Loosen by 1/2 turn the flare nut of gas pipe, which is conneted to 3-way valve.
(3) Loosen 2-way valve by 90° using hexagon wrench, and after approx. 10 sec tighten it up. Gas comes out through flare nut on wide pipe. If no gas is discharged, tighten flare nut with specified torque.
(4) Open 2-way and 3-way valves using specified torque.
(5) Tighten the caps on the valves with specified torque.

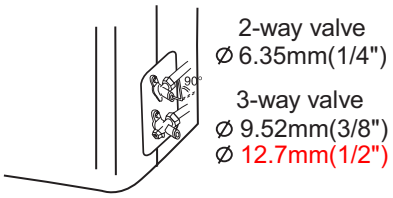

HSU-09C03/VA(ZXF)
HSU-09H03/VA(ZXF)
HSU-12C03/VA(ZXF)
HSU-12H03/VA(ZXF)

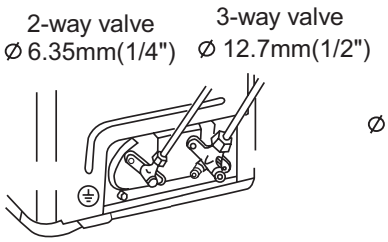

HSU-18C03/V(ZXF)
HSU-18H03/V(ZXF)
HSU-12H03/VB(ZXF)
HSU-12H03/V(ZXF)

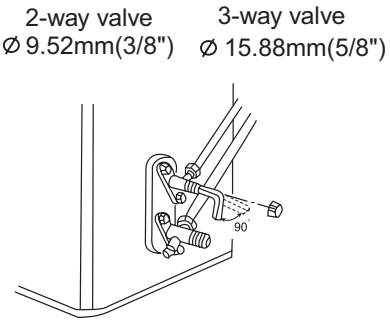

HSU-22C03/V(ZXF)
HSU-22H03/V(ZXF)
HSU-22C03/V(ZF)
HSU-22H03/V(ZF)
HSU-24C03/V(ZXF)
HSU-24C03/V(ZF)
HSU-24H03/V(ZXF)
HSU-24H03/V(ZF)
HSU-24HK0307

	Tighten torque N.m
Valve rod	7-9
Valve cap	20-25

- When connecting pipe exceeds 5 meters, 16g refrigerant shall be added per exceeding meter. Charge according to the following list.

Piping length	5m	7m	10m
Additional amount	No need	32g	80g

- Note: When extending piping, air inside piping shall be removed by using external refrigerant gas, charge according to the following list.

Brand new outdoor unit is charged 50g more refrigerant than regulated weight、
Only for first installation, this extra 50g can be used to purge air in pipes.

★ 1 During this procedure, 50g refrigerant will be discharged in piping.
(This must be strictly controlled within 90° and 10 sec.)

Все каталоги и инструкции здесь: https://splitsystema48.ru/instrukcii-po-ekspluatacii-kondicionerov.html

1.Power Source Installation

- The power source must be exclusively used for air conditioner. (Over I0A)
- In the case of installing an air conditioner in a moist place, please install an earth leakage breaker.
- For installation in other places, use a circuit breaker as far as possible.

2.Cutting and Flaring Work of Piping

- Pipe cutting is carried out with a pipe cutter and burs must be removed.
- After inserting the flare nut, flaring work is carried out.

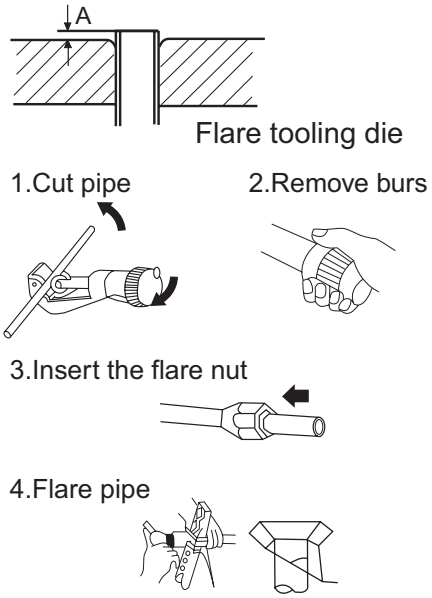

	Pipe diameter(ϕ)	Size A(mm)
Liquid side	6.35mm(1/4")	0.8~1.5
Liquid side	9.52mm(3/8")	1.0~1.8
Gas side	9.52mm(3/8")	1.0~1.8
Gas side	12.7mm(1/2")	1.2~2.0
Gas side	15.88mm(5/8")	1.2~2.0

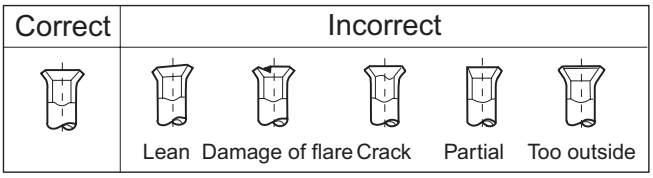

3.On Drainage

Please install the drain hose so as to be downward slope without fail.
Please don't do the drainage as shown below.

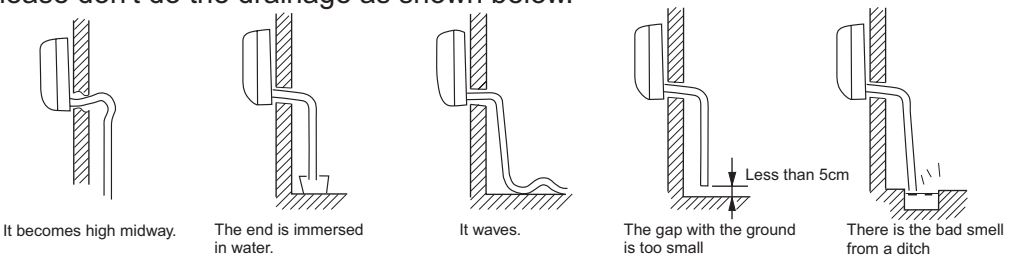

- Please pour water in the drain pan of the indoor unit, and confirm that drainage is carried out surely to outdoor.
- In case that the attached drain hose is in a room, please apply heat insulation to it without fail.

Check for Installation and Test Run

- Please kindly explain to our customers how to operate through the instruction manual.

Check Items for Test Run

☐ Put check mark ✓ in boxes

☐ Gas leak from pipe connecting?
☐ Heat insulation of pipe connecting?
☐ Are the connecting wirings of indoor and outdoor firmly inserted to the terminal block?
☐ Is the connecting wiring of indoor and outdoor firmly fixed?
☐ Is drainage securely carried out?
☐ Is the earth line securely connected?
☐ Is the indoor unit securely fixed?
☐ Is power source voltage abided by the code?
☐ Is there any noise?
☐ Is the lamp normally lighting?
☐ Are cooling and heating (when in heat pump) performed normally?
☐ Is the operation of room temperature regulator normal?

Все каталоги и инструкции здесь: https://splitsystema48.ru/instrukcii-po-ekspluatacii-kondicionerov.html

9. Removal Procedure

Indoor unit

9.1 Removal of Air Filter

Procedure

Warning Be sure to wait 10 minutes or more after turning off all power supplies before disassembling work.

Step	Procedure		Points
1. Features			
2. Remove the air filters.			
1	Hold the front panel by the tabs on the both sides and lift it until it stops with a click.	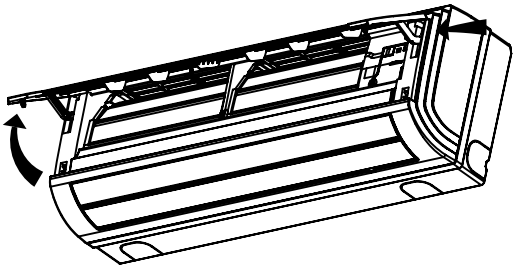	
2	Lift an air filter upwards slightly and then pull it out downwards.	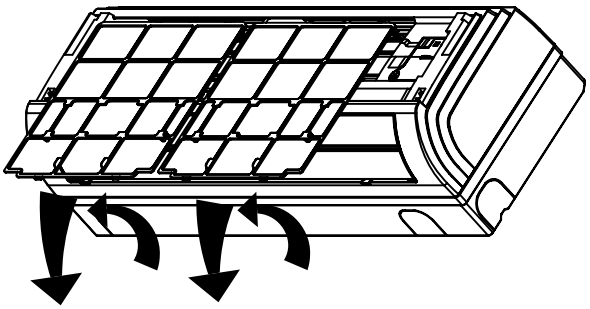	■ Insert the air filters along grooves when installing. ■ When installing, insert 2 hooks of the air filter completely.

Все каталоги и инструкции здесь: https://splitsystema48.ru/instrukcii-po-ekspluatacii-kondicionerov.html

9.2 Removal of Front Grille

Procedure

Warning Be sure to wait 10 minutes or more after turning off all power supplies before disassembling work.

Step	Procedure		Points
3 .	Remove the front panel.		
1	Open the front panel to the position. Release the both sides pivots and remove the front panel.	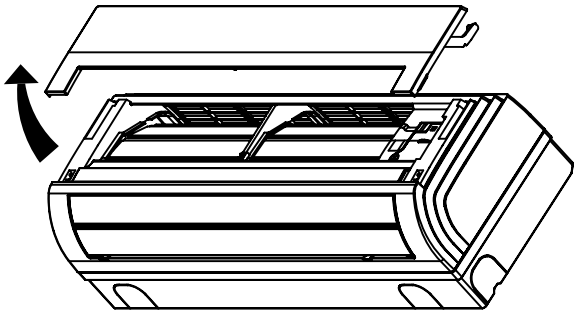	
2	Release the marked two hooks, bend the horizontal blades slightly.	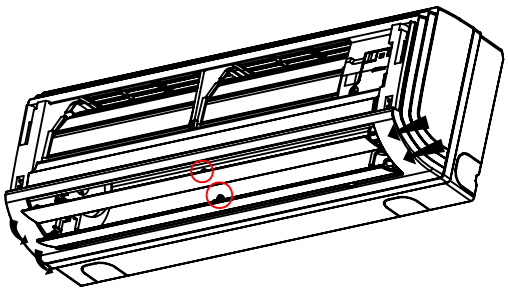	■ Start the removal procedure of front grille when the panels are closed. ■ Slide the front side to side to release each axis. ■ When assembling ,align the right and left axes with grooves in turn and insert then to the end.
3	Pull out and remove the blades.	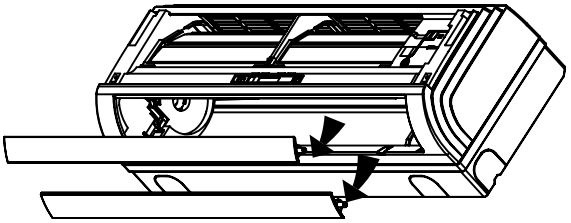	
4	Release the marked three hooks and two srews.	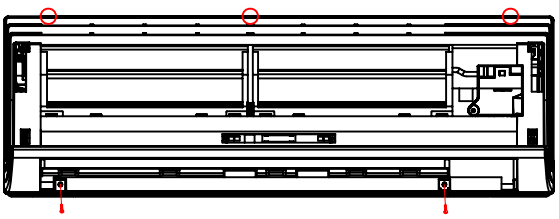	

Все каталоги и инструкции здесь: https://splitsystema48.ru/instrukcii-po-ekspluatacii-kondicionerov.html

Step	Procedure		Points
5	Pull the front grill out horizontally and remove it.	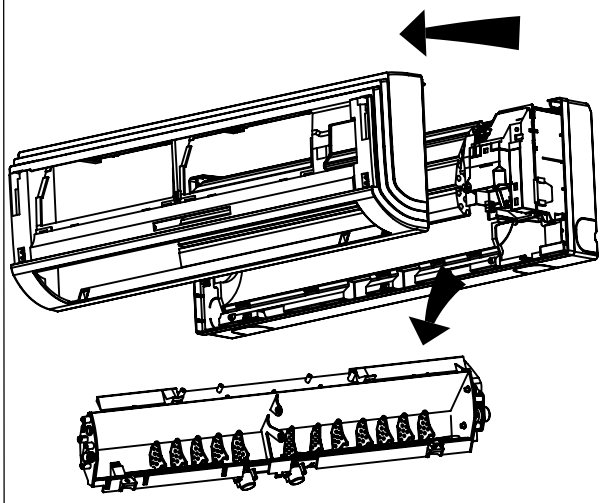	■ When assembling,install the grill horizontally so as not stuff the flap inside. ■ When assembling,make sure the three hooks are caught properly.
6	Relrase the marked hooks.	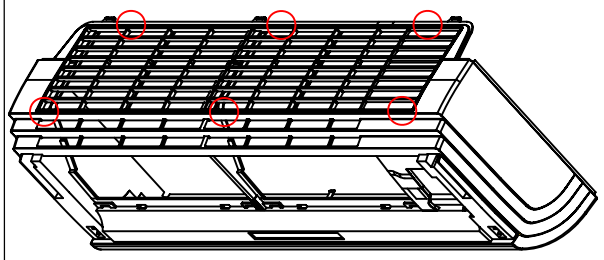	
7	Pull out the inlet grill slightly and remove it.	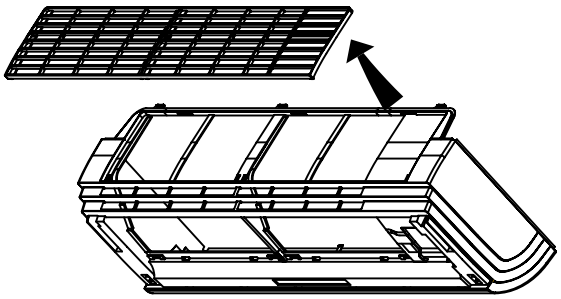	

Все каталоги и инструкции здесь: https://splitsystema48.ru/instrukcii-po-ekspluatacii-kondicionerov.html

9.3 Removal of Vertical Blades and Swing Motor

Procedure

Warning Be sure to wait 10 minutes or more after turning off all power supplies before disassembling work.

Step	Procedure		Points
■ Remove the assembling of outlet grill.			
1 Remove the vertical blades.			
1	Loosen the marked srews and then remove the moters.	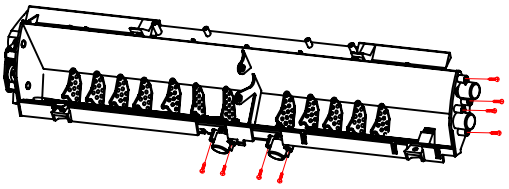	
2	Push the hooks on the back of the vertical blades and remove .	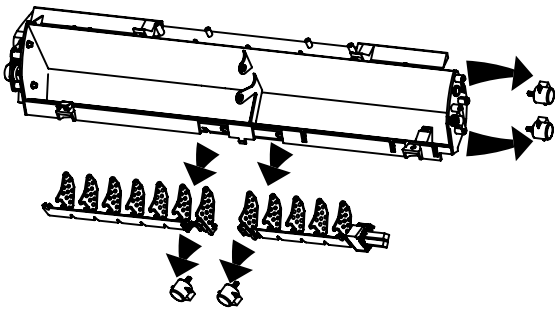	

Все каталоги и инструкции здесь: https://splitsystema48.ru/instrukcii-po-ekspluatacii-kondicionerov.html

9.4 Removal of Electrical Box

Procedure

Warning Be sure to wait 10 minutes or more after turning off all power supplies before disassembling work.

Step	Procedure		Points
1	Loosen the screw of the drip proof plate.	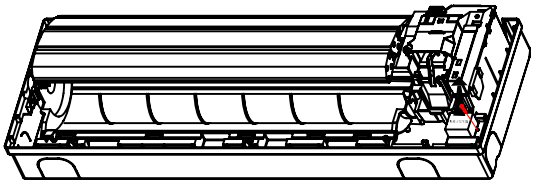	■ Discharge the static electricity from your body before touching the electrical parts like signal receiver PCB. It may cause malfunction of PCB.
2	Loosen the marked screws on the cover.	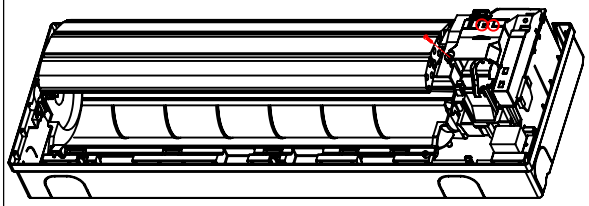	
3	Lift and remove the cover.	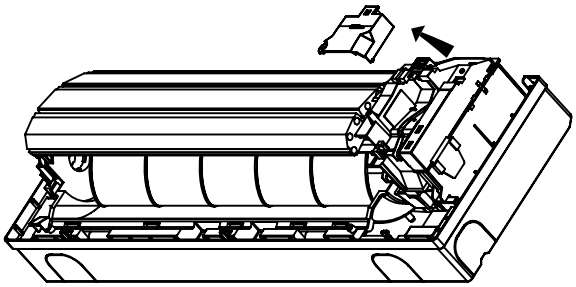	

Все каталоги и инструкции здесь: https://splitsystema48.ru/instrukcii-po-ekspluatacii-kondicionerov.html

1	Release the marked hooks on the right side	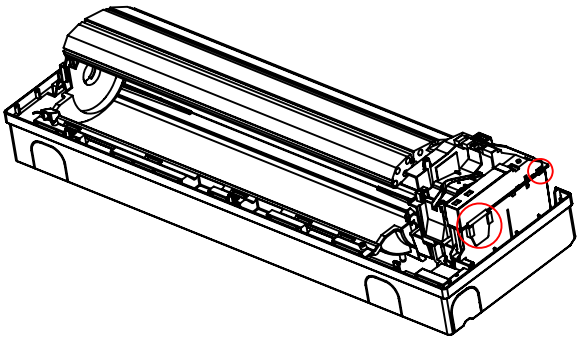	
2	Remove the electrical box cover.	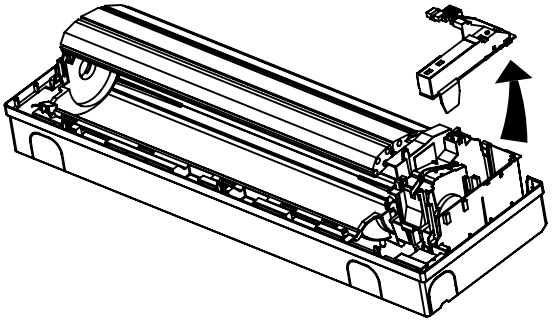 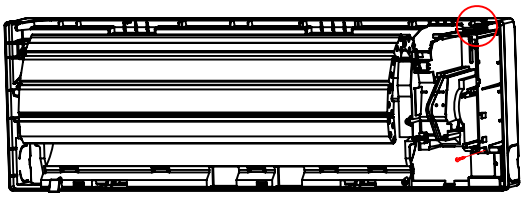	
3	Lift and remove the electric box.	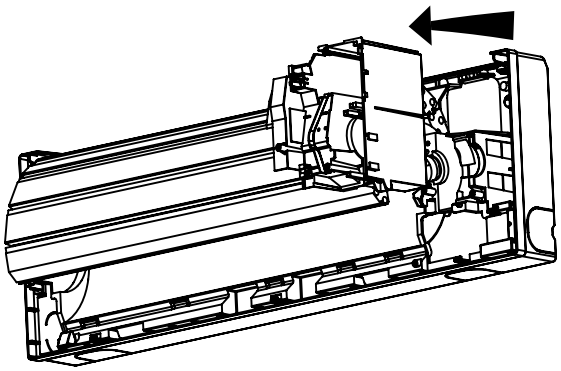	■ When assembling,insert the left hook of the drip proof plate into the hem plate of the heat exchanger.

Haier Все каталоги и инструкции здесь: https://splitsystema48.ru/instrukcii-po-ekspluatacii-kondicionerov.html mestic Air Conditioner

9.5 Removal of Heat Exchanger

Procedure

Warning Be sure to wait 10 minutes or more after turning off all power supplies before disassembling work.

1	Loosen the marked screws fixed to the installation plate.		Caution If gas leaks, repair the spot of leaking, then collect all refrigerant from the unit. After conducting vacuum drying, recharge proper amount of refrigerant. Caution Do not contaminate any gas (including air) other than the specified refrigerant (R410A), into refrigerant cycle. (Contaminating of air or other gas causes abnormal high pressure in refrigerating cycle, and this results in pipe breakage or personal injuries.)
2	Remove the heat exchanger.	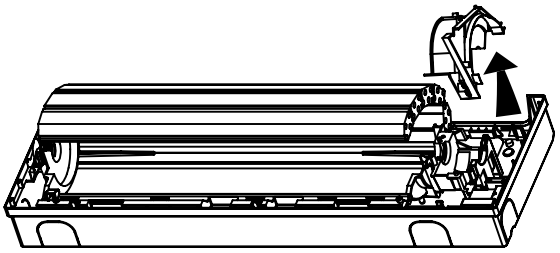 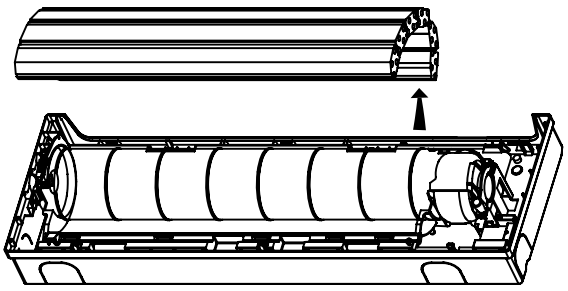	

Все каталоги и инструкции здесь: https://splitsystema48.ru/instrukcii-po-ekspluatacii-kondicionerov.html

9.6 Removal of Fan Rotor and Fan Motor

Procedure

Warning Be sure to wait 10 minutes or more after turning off all power supplies before disassembling work.

1	Loosen the marked screw.	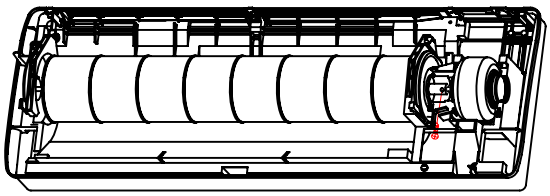	
2	Lift up the right part of the fan moter and slide it to rightward to remove. Lift and remove the fan.	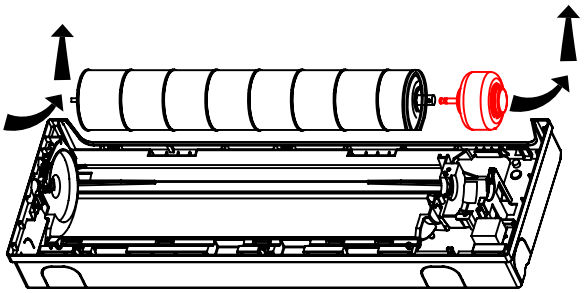	

Все каталоги и инструкции здесь: https://splitsystema48.ru/instrukcii-po-ekspluatacii-kondicionerov.html

Outdoor unit

9.8 Removal of Outdoor panel

Procedure

Warning Be sure to wait 10 minutes or more after turning off all power supplies before disassembling work.

Step	Procedure		Points
1. Features			
1	Loosen the service cover screw and remove the service cover.	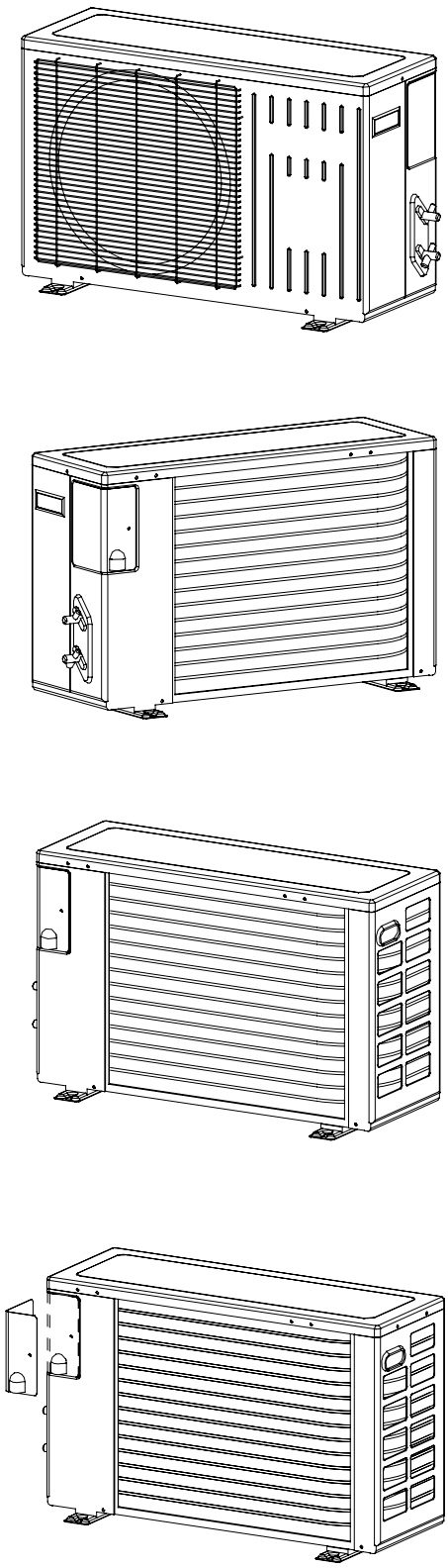	■ Be careful not to cut your finger by the fins of the heat exchanger.

Все каталоги и инструкции здесь: https://splitsystema48.ru/instrukcii-po-ekspluatacii-kondicionerov.html

Step	Procedure		Points
2. Remove the panels.			
1	Loosen the 4 screws and lift the top panel	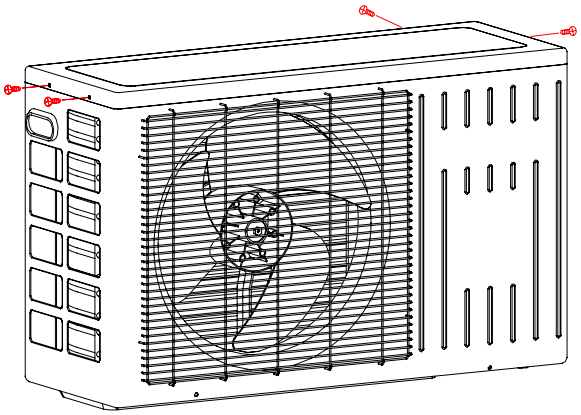 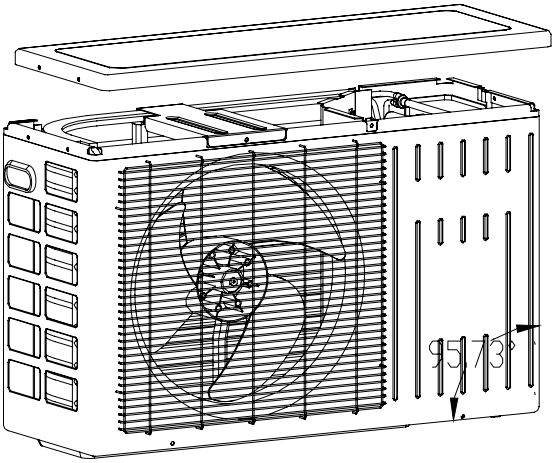	

Все каталоги и инструкции здесь:

Step	Procedure	Points
2	Loosen the screws of the panel. 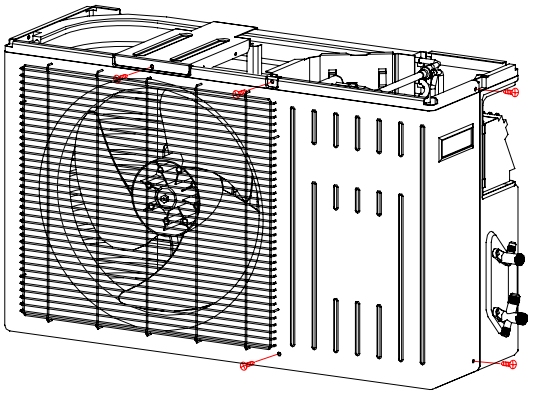 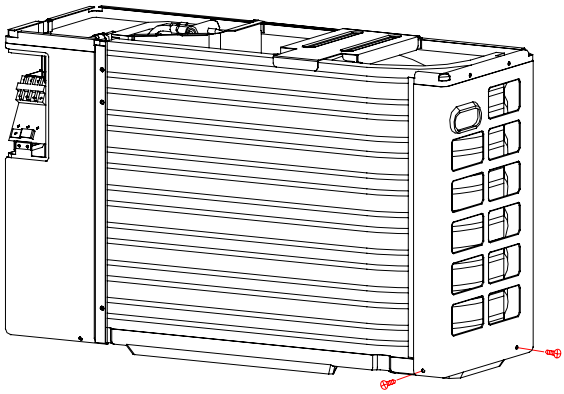 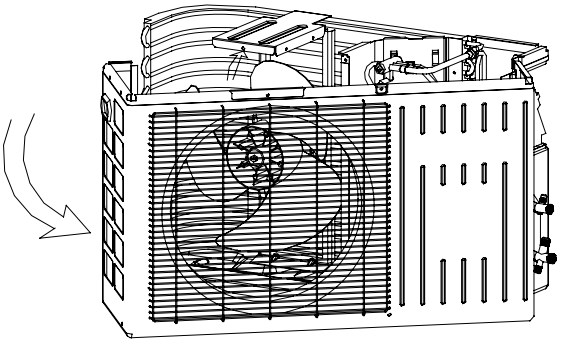	

Все каталоги и инструкции здесь: https://splitsystema48.ru/instrukcii-po-ekspluatacii-kondicionerov.html

Step	Procedure		Points
3	Pull and remove the front panel.	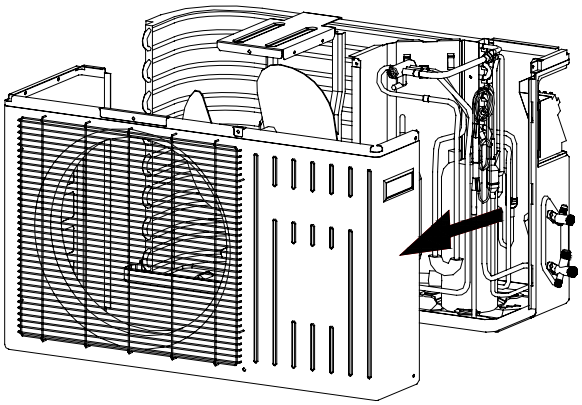 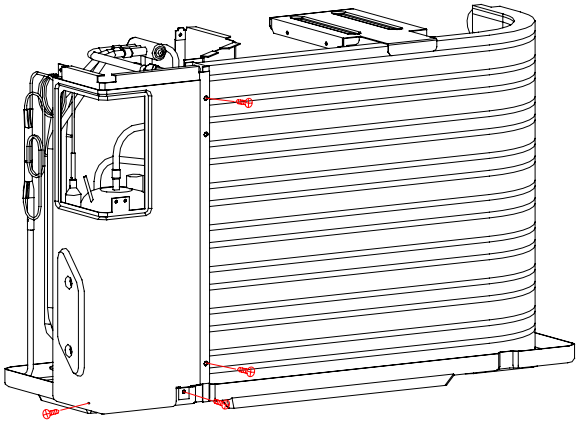 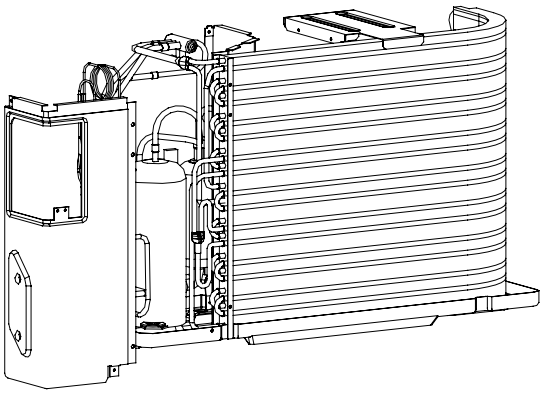	

Все каталоги и инструкции здесь: https://splitsystema48.ru/instrukcii-po-ekspluatacii-kondicionerov.html

9.9 Removal of Electrical Box

Procedure

Warning Be sure to wait 10 minutes or more after turning off all power supplies before disassembling work.

Step	Procedure		Points
1	Remove the fixing screws Then lift the electrical box	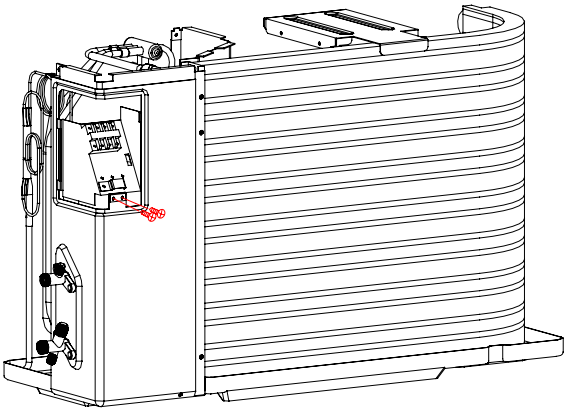 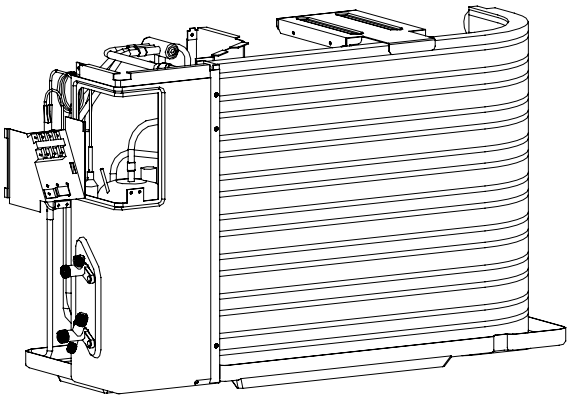	

Все каталоги и инструкции здесь: https://splitsystema48.ru/instrukcii-po-ekspluatacii-kondicionerov.html

9.10 Removal of Fan and Fan Motor

Procedure

Warning Be sure to wait 10 minutes or more after turning off all power supplies before disassembling work.

Step	Procedure		Points
1	Loosen the fixing screw and remove the fan	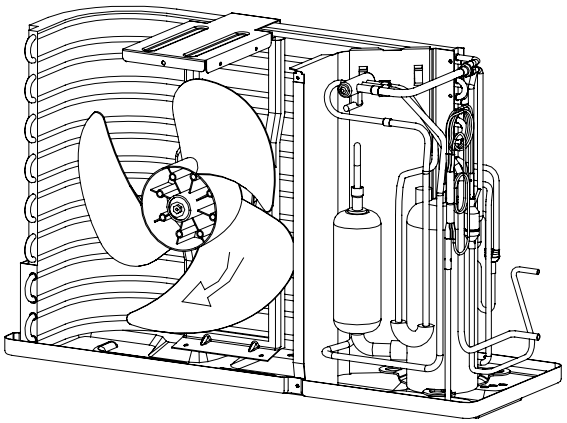 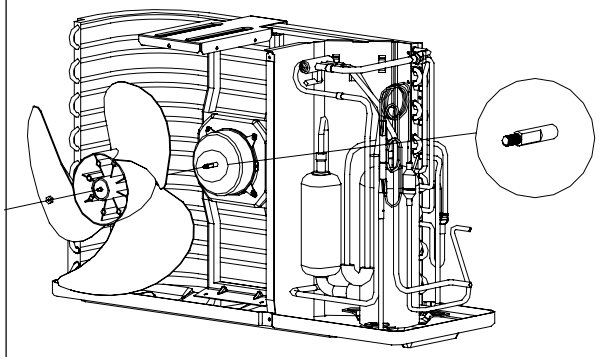 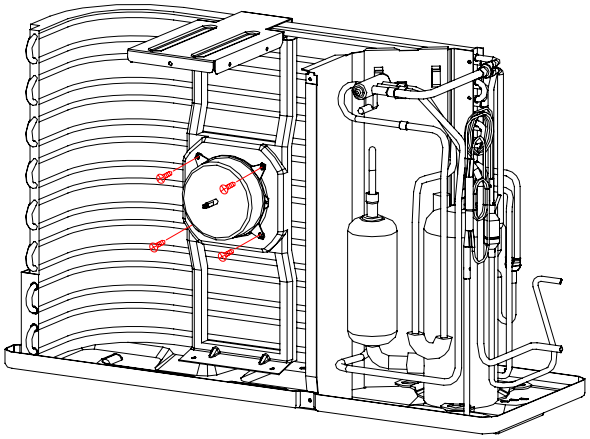	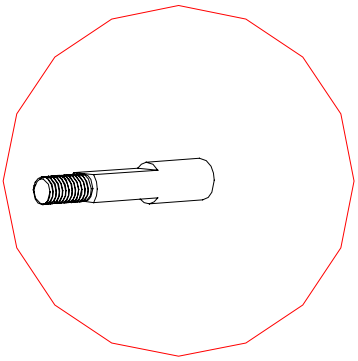 ■ Put the lead wire through the back of the motor when assembling. (so as not to be entangled with the propeller fan)

Все каталоги и инструкции здесь: https://splitsystema48.ru/instrukcii-po-ekspluatacii-kondicionerov.html

9.11 Removal of fan motor bracket and partition

Procedure

Warning Be sure to wait 10 minutes or mo
before disassembling work.

Step	Procedure		Points
1	Loosen the fixing screws and lift the fan motor bracket .	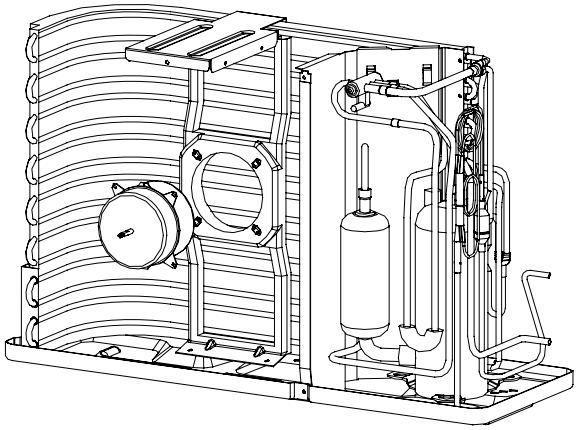 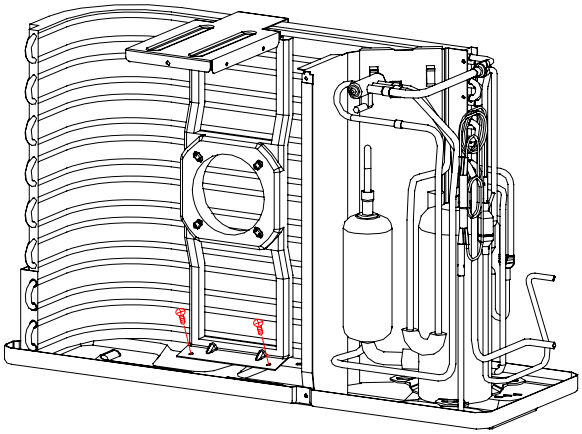 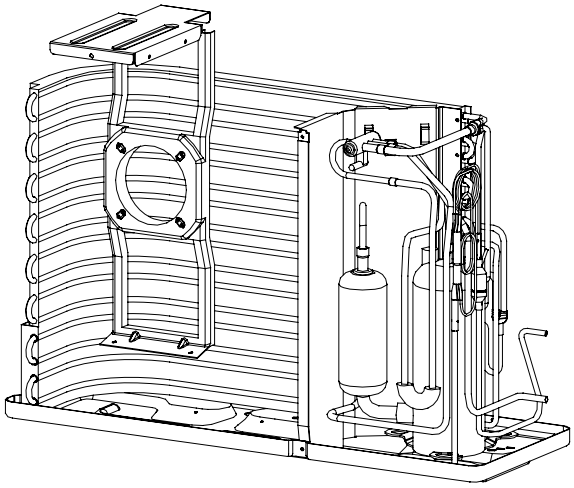	

Все каталоги и инструкции здесь: https://splitsystema48.ru/instrukcii-po-ekspluatacii-kondicionerov.html

Step	Procedure		Points
3	Loosen the 2 screws	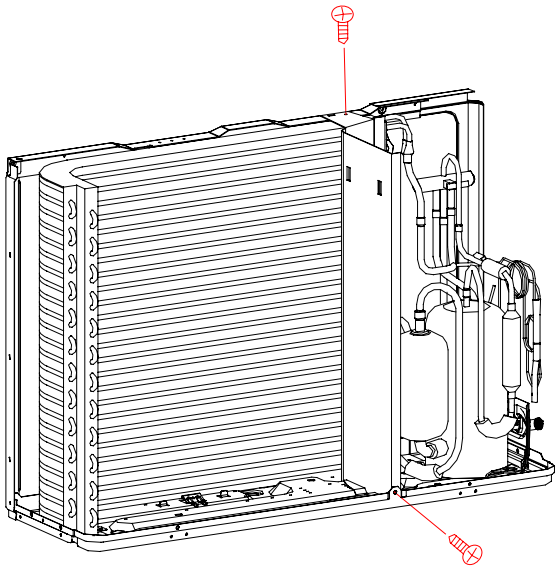	
4	The partition plate has a hook on the lower side.Lift and pull the partition plate to remove.	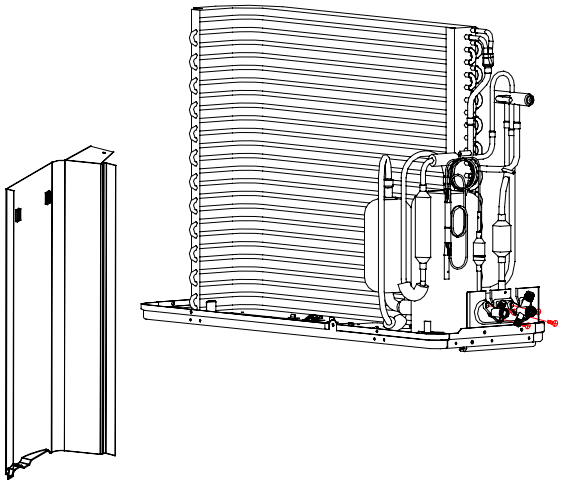	■ When assembling ,fit the lower hook into the bottom frame .
5	Loosen the marked fixing screws	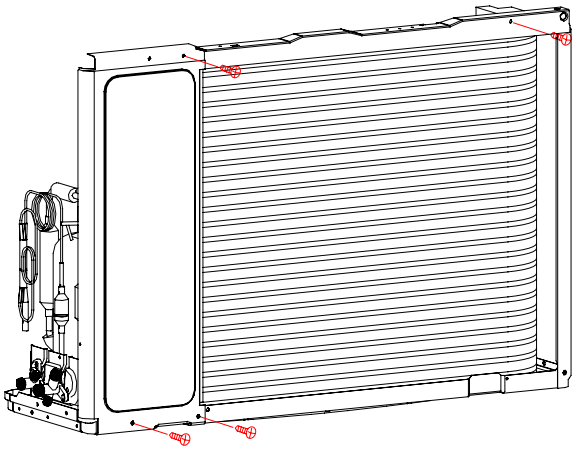	

Все каталоги и инструкции здесь: https://splitsystema48.ru/instrukcii-po-ekspluatacii-kondicionerov.html

9.12 Removal of compressor and heat exchanger

Procedure

Warning Be sure to wait 10 minutes or more after tu
before disassembling work.

Step	Procedure		Points
1	Loosen the marked screw .	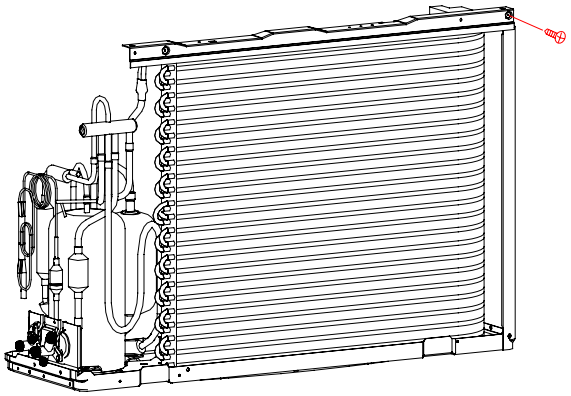	
2	Cut down the conecting pipe and pull out the compressor and remove the valve bracket .	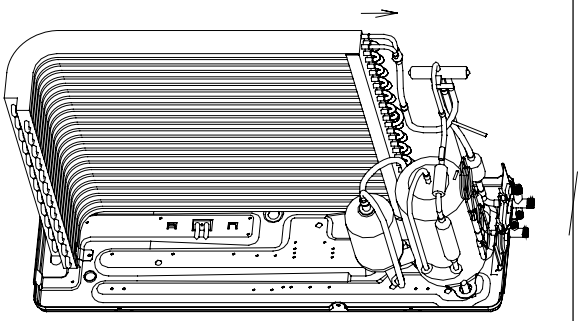 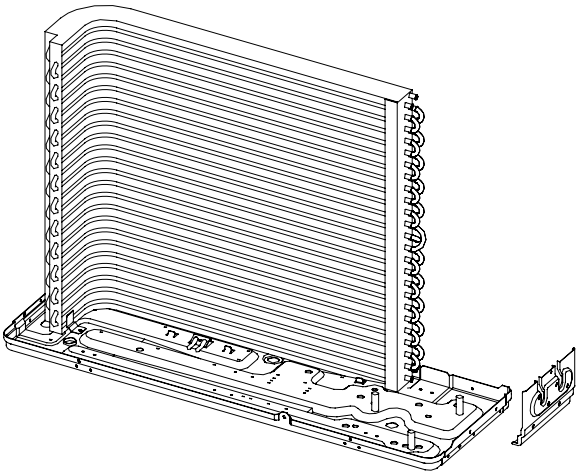	

Все каталоги и инструкции здесь: https://splitsystema48.ru/instrukcii-po-ekspluatacii-kondicionerov.html

Step	Procedure		Points
3	Loosen the marked fixing screw .	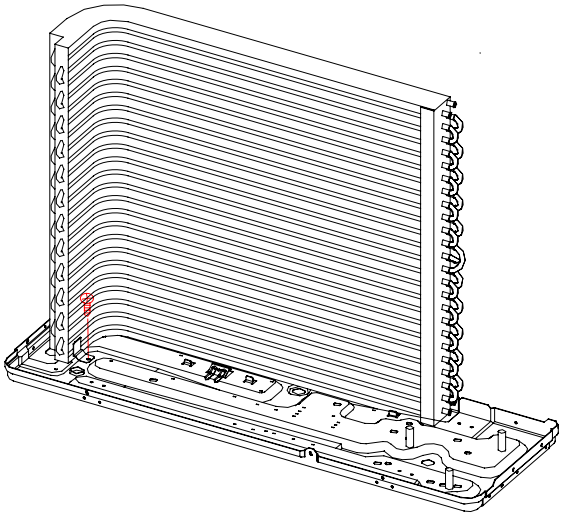	
4	Loosen the fixing hook and remove the heat exchanger .	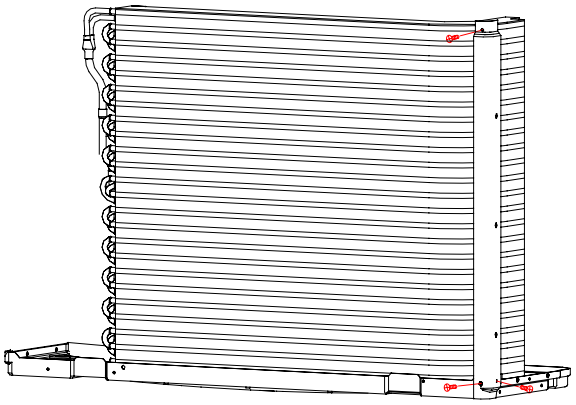 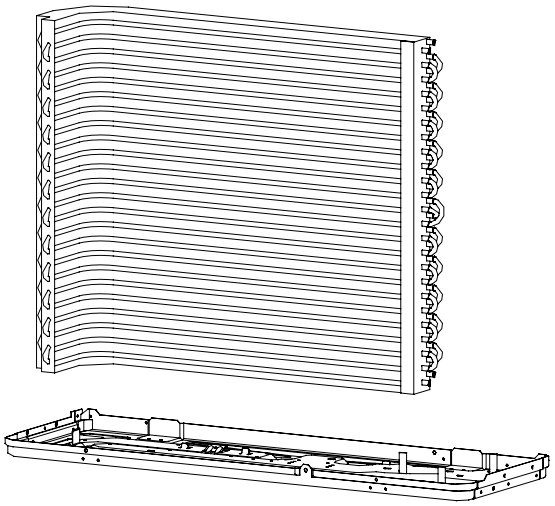	

Все каталоги и инструкции здесь: https://splitsystema48.ru/instrukcii-po-ekspluatacii-kondicionerov.html

10. Appendix

10.1 Piping Diagrams

Cooling mode

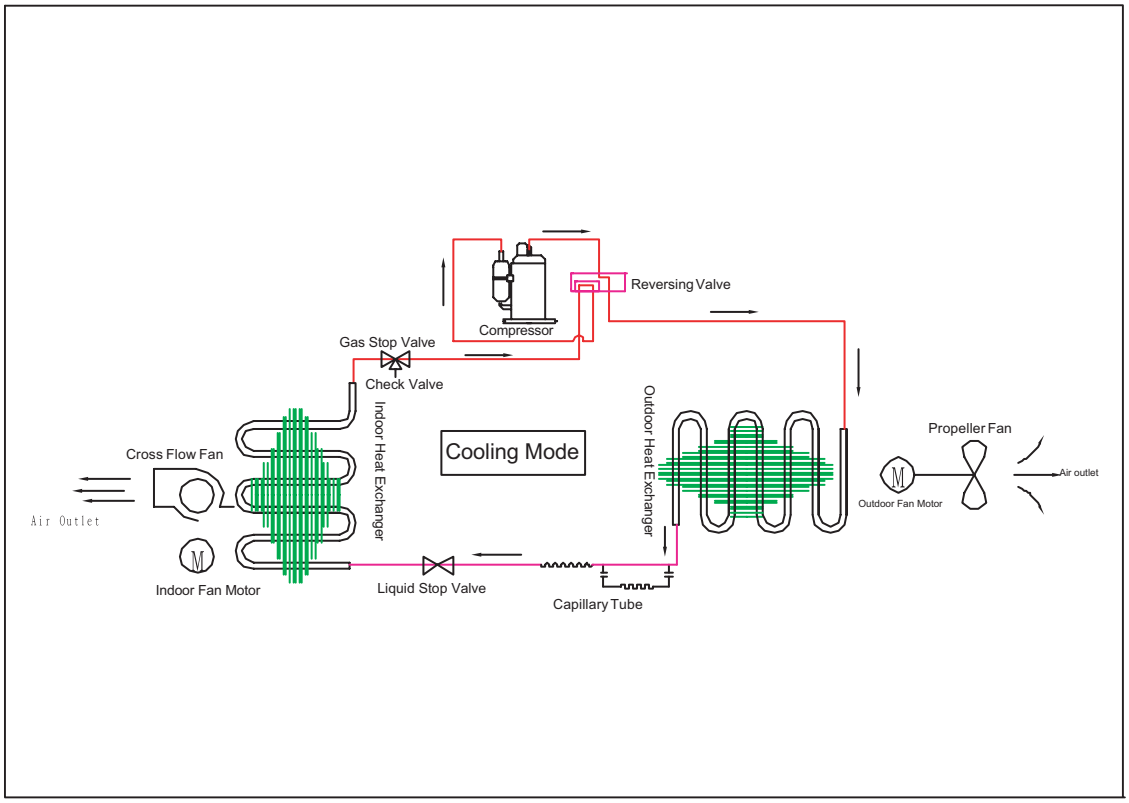

Heating mode

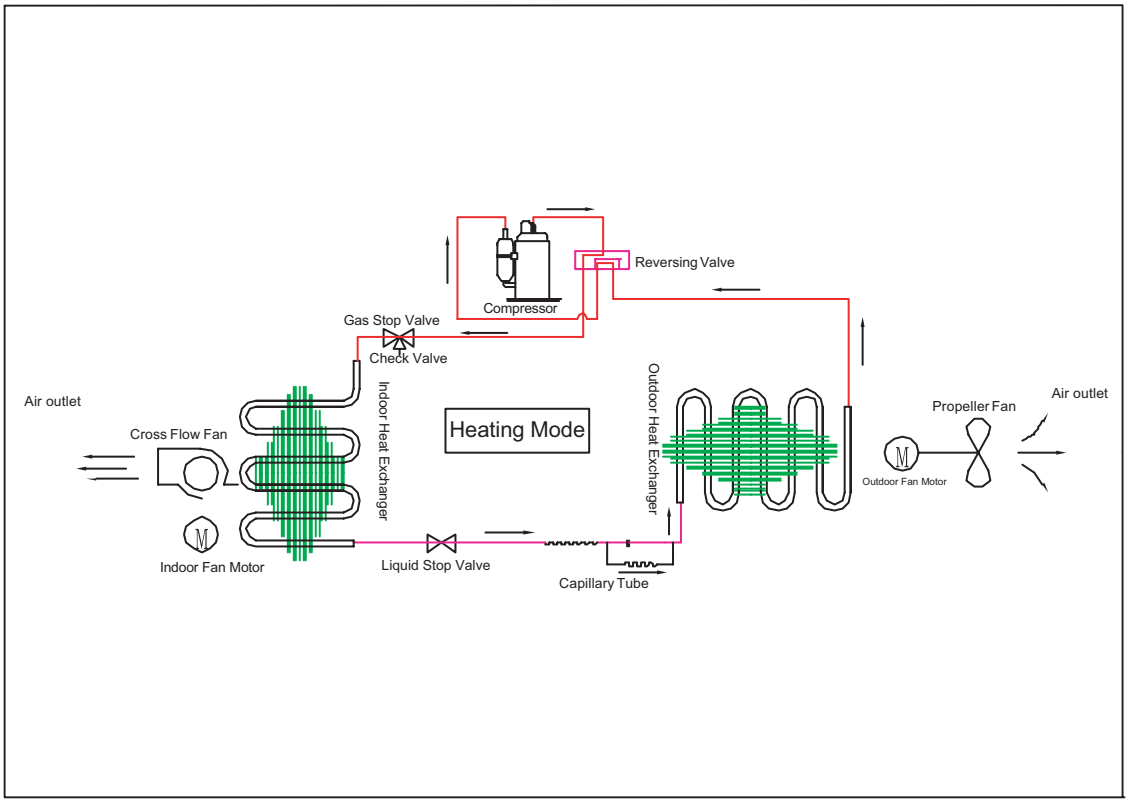

Все каталоги и инструкции здесь: https://splitsystema48.ru/instrukcii-po-ekspluatacii-kondicionerov.html

10.2 Wiring Diagrams

Indoor unit

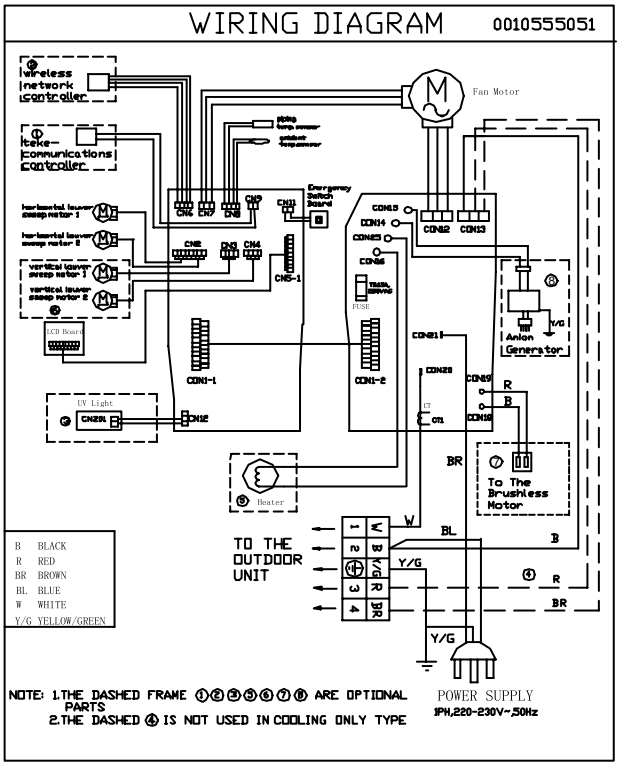

Outdoor unit

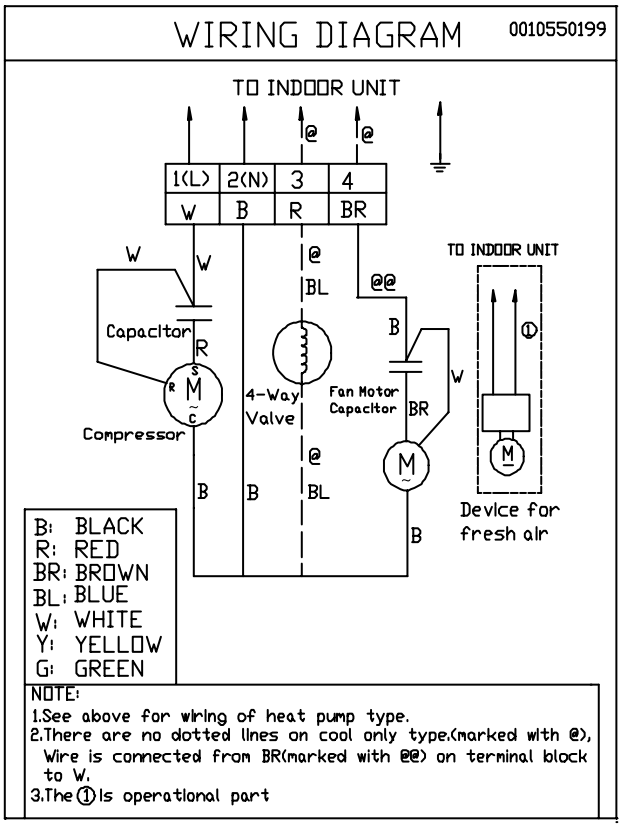

Haier Все каталоги и инструкции здесь: https://splitsystema48.ru/instrukcii-po-ekspluatacii-kondicionerov.html estic Air Conditioner

10.3 Circuit Diagrams

Indoor Unit

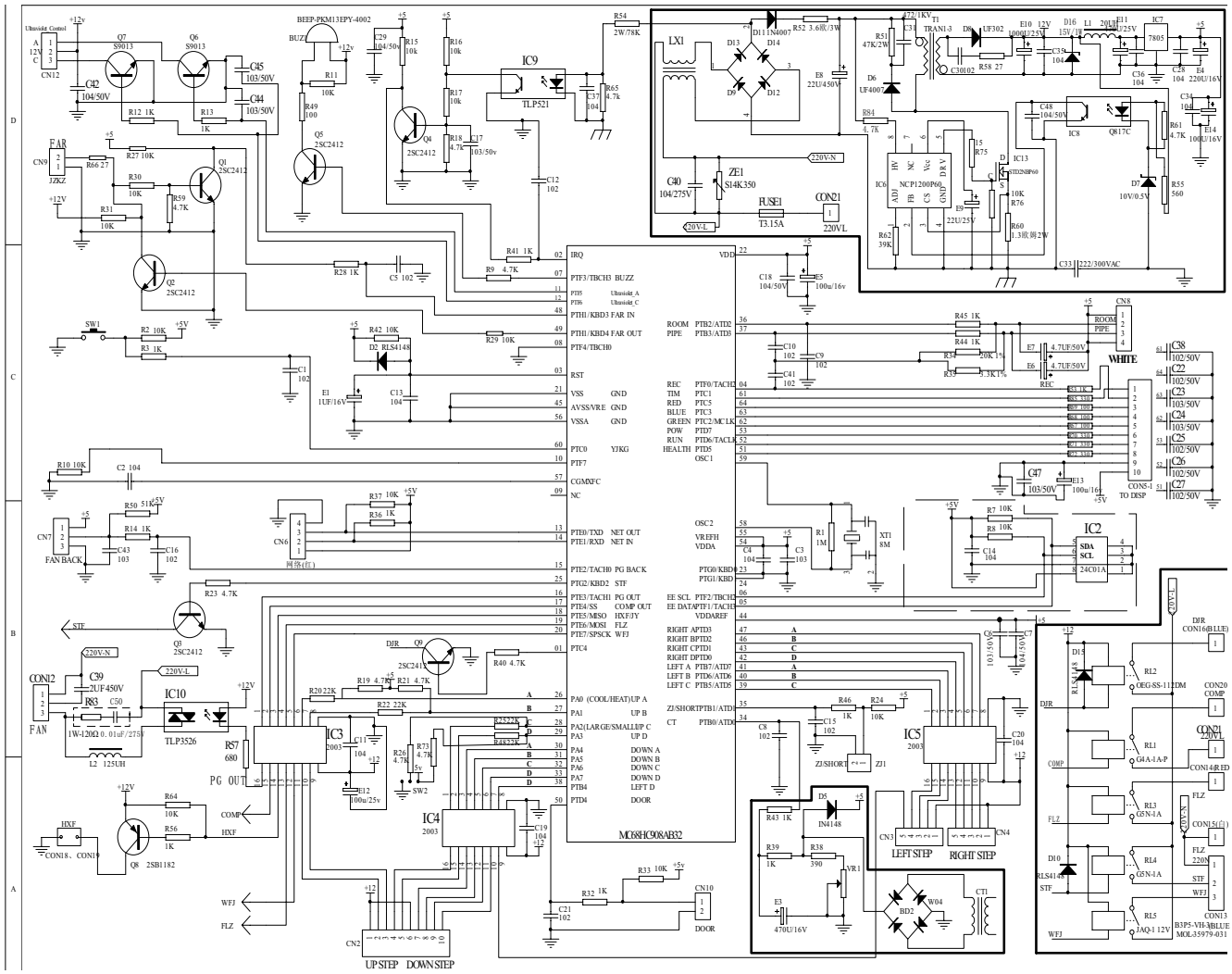

Все каталоги и инструкции здесь: https://splitsystema48.ru/instrukcii-po-ekspluatacii-kondicionerov.html

Sincere Forever

Haier Group

Haier Industrial Park, No.1, Haier Road

266101, Qingdao, China_

E-mail: hractech@haier.com

Tel: +86 532 87636957

Http://www.haier.com

Edited by: Zhao Jicheng

Signed by: Yang Bifei

Approved by: Zhu Zhenxue

splitoff.ru

Большая библиотека технической документации

https://splitsystema48.ru/instrukcii-po-ekspluatacii-kondicionerov.html

каталоги, инструкции, сервисные мануалы, схемы.